2025 Annual Summary Report

(Prepared under Ontario Regulation 170/03)

Fort Frances Drinking Water System

Town of Fort Frances

January 1 to December 31, 2025

Municipal Drinking Water Licence # 224-101

Drinking Water Works Permit # 224-201

Land Acknowledgement

The Town of Fort Frances respects and truly acknowledges that we are on treaty three territory, the traditional land of the Anishinaabe and the Métis Nation. We give gratitude and honour to the Ancestors, Elders and all Anishinaabe and Métis People for sharing their resources and knowledge.

Report Highlights

- There were no incidents of non-compliance identified through the inspection process and the inspection scored 100%.
- The Town of Fort Frances Water Treatment Plant was operated in accordance with all applicable legislation, and all terms and conditions of the Municipal Drinking Water Licence, Drinking Water Works Permit, and Permit to Take Water.
- Required regulatory sampling was completed in 2025.
- All adverse incidents were responded to and resolved in accordance with the required regulations and reported to the satisfaction of the Ministry of the Environment, Conservation and Parks and the Northwestern Health Unit.

Table of Contents

1.0 PURPOSE 4

2.0 SYSTEM OVERVIEW 4

3.0 COMPLIANCE 4

3.1 MECP INSPECTION 4

3.2 LICENCE AND PERMIT COMPLIANCE 4

3.3 ADVERSE WATER QUALITY INCIDENT(S) 5

4.0 RAW WATER AND TREATED WATER FLOW DATA (2025) 5

Appendices:

Appendix "A" - Municipal Drinking Water License

Appendix "B" - Drinking Water Works Permit

Appendix "C" - Permit to Take Water

Appendix "D" - Annual Report to MECP

Appendix "E" - Drinking Water System Inspection Program (2025 Inspection Report)

1.0 PURPOSE

The annual summary report for the Town of Fort Frances Drinking Water System was prepared in accordance with Schedule 22 of Ontario Regulation 170/03. The annual summary report covers the reporting period from January 1, 2025 to December 31, 2025. The Town of Fort Frances Drinking Water System is categorized as a Large Municipal Residential Drinking Water System (DWS #220000978). This report was prepared by Town of Fort Frances Public Works Staff and must be provided to Town Council by March 31st, 2026.

The Town of Fort Frances Drinking Water System was operated and maintained to ensure that safe drinking water supplied to consumers satisfy the requirements within the Safe Drinking Water Act, associated regulations, the Municipal Drinking Water Licence (224-101) and Drinking Water Works Permit (224-201).

2.0 SYSTEM OVERVIEW

The Town of Fort Frances Water Treatment Plant is a Class 3 conventional surface water treatment facility that utilizes a series of physical and chemical treatment processes including coagulation, flocculation, sedimentation, filtration, and disinfection to ensure the production of safe, high-quality drinking water for the community.

The WTP draws water from Rainy River where it is treated with aluminum sulphate to aid in the coagulation process prior to filtration. Primary disinfection is achieved with gaseous chlorine and once appropriate contact time is achieved, the water is stored in the plant reservoir until pumped out to the distribution system.

3.0 COMPLIANCE

3.1 MECP INSPECTION

The routine annual inspection was completed on December 4th, 2025 by the Ministry of the Environment, Conservation and Parks (MECP). There were no incidents of non-compliance identified throughout the inspection process. Further to the inspection report, the MECP has an established inspection compliance risk framework. The Town of Fort Frances Drinking Water System achieved a 0% risk rating and 100% final inspection rating.

3.2 LICENCE AND PERMIT COMPLIANCE

The Town of Fort Frances Drinking Water System maintained compliance with all applicable legislation, and all terms and conditions of the Municipal Drinking Water License, Drinking Water Works Permit, and Permit to Take Water in 2025.

3.3 ADVERSE WATER QUALITY INCIDENT(S)

The drinking water system had two (2) adverse water quality incidents reported to the MECP Spills Action Center (SAC) and the Medical Officer of Health at the Northwestern Health Unit (NWHU).

Date	AWQI #	Parameter	Corrective Action
September 24, 2025	#170062	Total Coliforms	Total coliforms were detected in a distribution sample. The event was reported to SAC and the NWHU. The impacted area was flushed and re-sampled. Re-sample met microbiological standards.
October 1, 2025	#170389	Haloacetic Acids (HAAs)	Haloacetic Acids (HAA) running annual average (RAA) exceedance for Q3 of 2025. The RAA was calculated at 82.175 µg/L. A high result of 110 µg/L sampled in June 2025 resulted in an elevated RAA. Town to inform NWHU of updated quarterly results as sampled and reported.

4.0 RAW WATER AND TREATED WATER FLOW DATA (2025)

The following tables and graphs summarize the volume and flow rates of water taken and produced during the reporting period including monthly average flows, maximum daily flows, and total monthly volumes. The Town is authorized to take water as per Permit to Take Water #3528-AE6PEM (issued September 27, 2016). This permit allows the Town of Fort Frances Water Treatment Plant to draw a total of 17,000 m^3/day from its raw water source at a maximum flow rate of 12,000 L/min. As indicated in Table 1, the maximum daily flow rate of raw water in 2025 was 6,100 m^3/day, which is 35.9% of the maximum allowable flow rate.

In accordance with the Municipal Drinking Water Licence 224-101, the Town of Fort Frances Water Treatment Plant shall not be operated to exceed the rated capacity of 17,000 m^3/day on any calendar day. As indicated in Table 2, the maximum daily flow rate of treated water in 2025 was 5,800 m^3/day, which is 34.1% of the maximum allowable rated capacity. The Town of Fort Frances Water Treatment Plant meets existing water flow requirements and is capable of accommodating future demand.

Table 1. Raw Water Usage - 2025

Month	Total Raw Flow (m^3/month)	Average Raw Daily Flow (m^3/day)	Maximum Raw Daily Flow (m^3/day)	Max Daily Allowable Volume (m^3/day)
January	155,920	5,030	5,470	17,000
February	138,950	4,960	5,320	17,000
March	154,820	4,990	5,310	17,000
April	149,620	4,990	5,390	17,000
May	157,010	5,060	5,410	17,000
June	161,120	5,370	5,800	17,000
July	169,600	5,470	5,800	17,000
August	171,240	5,520	5,930	17,000
September	161,250	5,380	5,790	17,000
October	165,860	5,350	5,750	17,000
November	158,730	5,290	5,620	17,000
December	164,670	5,310	**6,100**	17,000

Table 2. Treated Water Usage - 2025

Month	Total Flow Treated (m^3/month)	Average Daily Flow Treated (m^3/day)	Maximum Daily Flow Treated (m^3/day)	Max Daily Rated Capacity (m^3/day)
January	108,690	3,510	4,020	17,000
February	98,840	3,530	3,950	17,000
March	112,640	3,630	4,740	17,000
April	101,890	3,400	4,300	17,000
May	116,660	3,760	4,540	17,000
June	122,530	4,080	4,700	17,000
July	124,470	4,020	**5,800**	17,000
August	123,270	3,980	4,620	17,000
September	123,260	4,110	5,550	17,000
October	125,400	4,050	4,390	17,000
November	119,910	4,000	5,020	17,000
December	133,410	4,300	5,230	17,000

Table 3. Comparison of Actual to System Approved Flow

Month	Average Daily Treated Flow (m^3)	% of Rated Capacity	Maximum Daily Treated Flow (m^3)	% of Rated Capacity
January	3,510	20.6	4,020	23.6
February	3,530	20.8	3,950	23.2
March	3,630	21.4	4,740	27.9
April	3,400	20.0	4,300	25.3
May	3,760	22.1	4,540	26.7
June	4,080	24.0	4,700	27.6
July	4,020	23.6	5,800	**34.1**
August	3,980	23.4	4,620	27.2
September	4,110	24.2	5,550	32.6
October	4,050	23.8	4,390	25.8
November	4,000	23.5	5,020	29.5
December	4,300	25.3	5,230	30.8

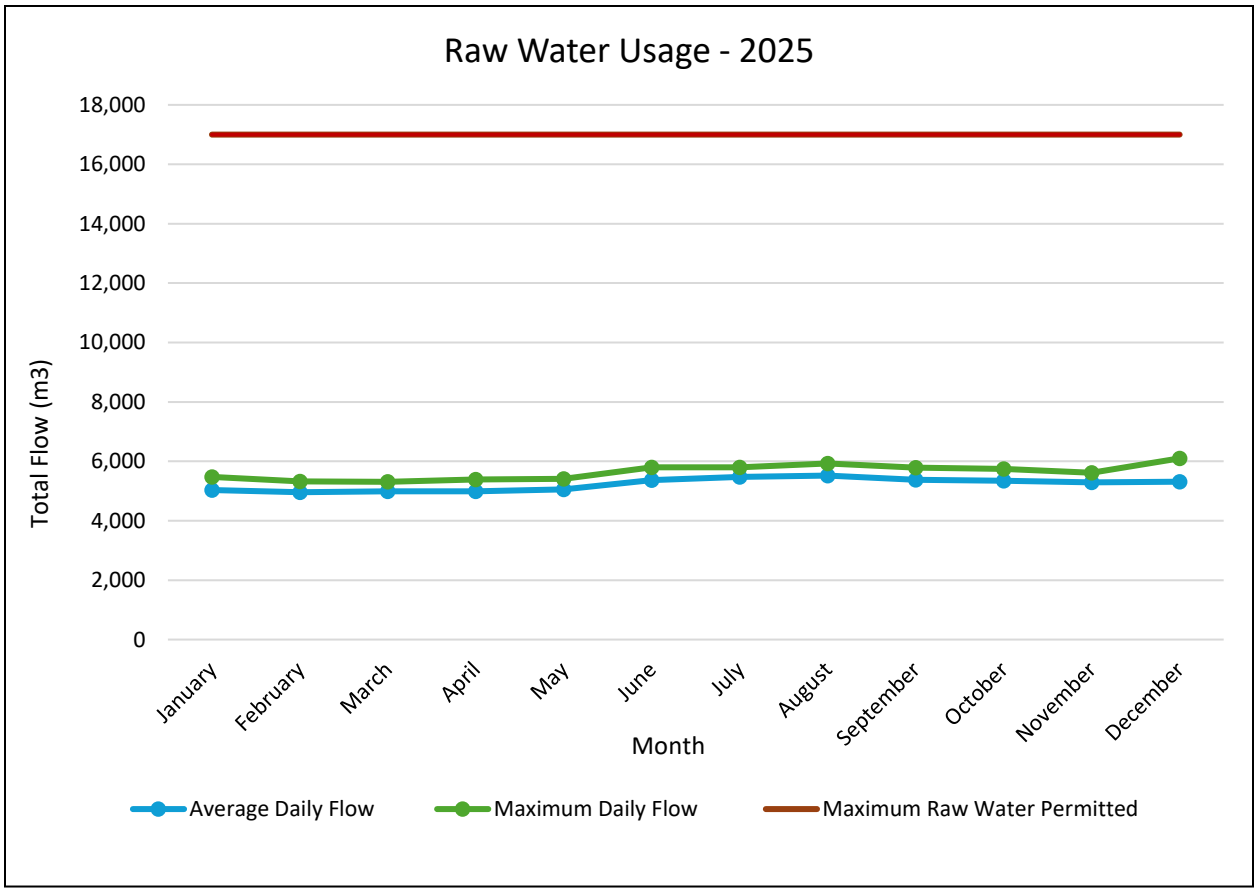

Figure 1. Raw Water Usage Compared to Permit to Take Water

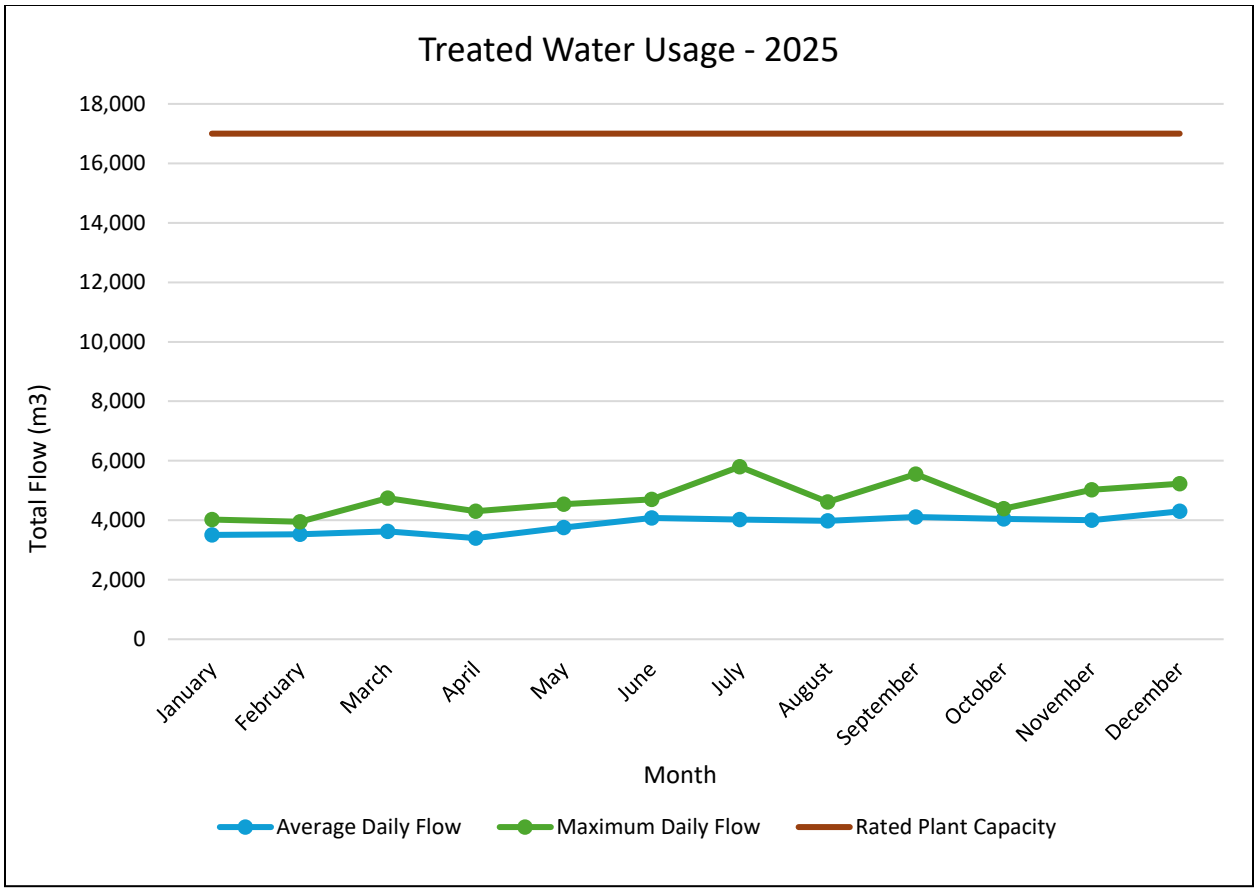

Figure 2. Treated Water Usage Compared to Rated Plant Capacity

Appendix "A"

MUNICIPAL DRINKING WATER LICENCE
Licence Number: 224-101
Issue Number: 4

Ontario

MUNICIPAL DRINKING WATER LICENCE

Licence Number: 224-101
Issue Number: 4

Pursuant to the *Safe Drinking Water Act*, 2002, S.O. 2002, c. 32, and the regulations made thereunder and subject to the limitations thereof, I hereby issue this municipal drinking water licence under Part V of the *Safe Drinking Water Act*, 2002, S.O. 2002, c. 32 to:

The Corporation of the Town of Fort Frances

320 Portage Avenue
Fort Frances, ON
P9A 3P9

For the following municipal residential drinking water system:

Fort Frances Drinking Water System

This municipal drinking water licence includes the following:

Schedule	Description
Schedule A	Drinking Water System Information
Schedule B	General Conditions
Schedule C	System-Specific Conditions
Schedule D	Conditions for Relief from Regulatory Requirements
Schedule E	Pathogen Log Removal/Inactivation Credits

Upon the effective date of this drinking water licence #224-101, all previously issued versions of licence #224-101 are revoked and replaced by this licence.

DATED at TORONTO this 15th day of February, 2022

Signature

A. Ahmed

Aziz Ahmed, P.Eng.
Director
Part V, *Safe Drinking Water Act*, 2002

Schedule A: Drinking Water System Information

System Owner	**The Corporation of the Town of Fort Frances**
Licence Number	**224-101**
Drinking Water System Name	**Fort Frances Drinking Water System**
Licence Effective Date	**February 15, 2022**

1.0 Licence Information

Licence Issue Date	February 15, 2022
Licence Effective Date	February 15, 2022
Licence Expiry Date	May 11, 2026
Application for Licence Renewal Date	November 10, 2025

2.0 Incorporated Documents

The following documents are applicable to the above drinking water system and form part of this licence:

2.1 Drinking Water Works Permit

Drinking Water System Name	Permit Number	Issue Date
Fort Frances Drinking Water System	224-201	May 11, 2021

2.2 Permits to Take Water

Water Taking Location	Permit Number	Issue Date
Rainy River	3528-AE6PEM	September 27, 2016

2.1 Other Documents

Document Title	Version Number	Version Date
Not Applicable	Not Applicable	Not Applicable

3.0 Financial Plans

The Financial Plan Number for the Financial Plan required to be developed for this drinking water system in accordance with O. Reg. 453/07 shall be:	224-301
Alternately, if one Financial Plan is developed for all drinking water systems owned by the owner, the Financial Plan Number shall be:	224-301A

4.0 Accredited Operating Authority

Drinking Water System or Operational Subsystems	Accredited Operating Authority	Operational Plan No.	Operating Authority No.
Fort Frances Drinking Water System	The Corporation of the Town of Fort Frances	224-401	224-OA1

Schedule B: General Conditions

System Owner	**The Corporation of the Town of Fort Frances**
Licence Number	**224-101**
Drinking Water System Name	**Fort Frances Drinking Water System**
Licence Effective Date	**February 15, 2022**

1.0 Definitions

1.1 Words and phrases not defined in this licence and the associated drinking water works permit shall be given the same meaning as those set out in the SDWA and any regulations made in accordance with that act, unless the context requires otherwise.

1.2 In this licence and the associated drinking water works permit:

"**adverse effect**", "**contaminant**" and "**natural environment**" shall have the same meanings as in the EPA;

"**alteration**" may include the following in respect of this drinking water system:

(a) An addition to the system,
(b) A modification of the system,
(c) A replacement of part of the system, and
(d) An extension of the system;

"**compound of concern**" means a contaminant described in paragraph 4 subsection 26 (1) of O. Reg. 419/05, namely, a contaminant that is discharged to the air from a component of the drinking water system in an amount that is not negligible;

"CT" means the CT Disinfection Concept, as described in subsection 3.1.1 of the Ministry's Procedure for Disinfection of Drinking Water in Ontario, dated July 29 2016.

"**Director**" means a Director appointed pursuant to section 6 of the SDWA for the purposes of Part V of the SDWA;

"**drinking water works permit**" means the drinking water works permit for the drinking water system, as identified in Schedule A of this licence and as amended from time to time;

"emission summary table" means a table described in paragraph 14 of subsection 26 (1) of O. Reg. 419/05;

"EPA" means the *Environmental Protection Act*, R.S.O. 1990, c. E.19;

"**financial plan**" means the financial plan required by O. Reg. 453/07;

"Harmful Algal Bloom (HAB)" means an overgrowth of aquatic algal bacteria that produce or have the potential to produce toxins in the surrounding water, when the algal

cells are damaged or die. Such bacteria are harmful to people and animals and include microcystins produced by cyanobacterial blooms.

"**licence**" means this municipal drinking water licence for the municipal drinking water system identified in Schedule A of this licence;

"**licensed engineering practitioner**" means a person who holds a licence, limited licence or temporary licence under the Professional Engineers Act;

"Ministry" means the Ontario Ministry of the Environment, Conservation and Parks;

"**operational plan**" means an operational plan developed in accordance with the Director's Directions – Minimum Requirements for Operational Plans made under the authority of subsection 15(1) of the SDWA;

"**owner**" means the owner of the drinking water system as identified in Schedule A of this licence;

"OWRA" means the *Ontario Water Resources Act*, R.S.O. 1990, c. 0.40;

"**permit to take water**" means the permit to take water that is associated with the taking of water for purposes of the operation of the drinking water system, as identified in Schedule A of this licence and as amended from time to time;

"point of impingement" has the same meaning as in section 2 of O. Reg. 419/05 under the EPA;

"point of impingement limit" means the appropriate standard from Schedule 2 or 3 of O. Reg. 419/05 under the EPA and if a standard is not provided for a compound of concern, the concentration set out for the compound of concern in the document titled "Air Contaminants Benchmarks (ACB) List: Standards, guidelines and screening levels for assessing point of impingement concentrations of air contaminants", as amended from time to time and published by the Ministry and available on a government of Ontario website;

"provincial officer" means a provincial officer designated pursuant to section 8 of the SDWA;

"**publication NPC-300**" means the Ministry publication titled "Environmental Noise Guideline: Stationary and Transportation Sources – Approval and Planning" dated August 2013, as amended;

"**SCADA system**" means a supervisory control and data acquisition system used for process monitoring, automation, recording and/or reporting within the drinking water system;

"**SDWA**" means the *Safe Drinking Water* Act, 2002, S.O. 2002, c. 32;

"**sensitive receptor**" means any location where routine or normal activities occurring at reasonably expected times would experience adverse effect(s) from a discharge to air from an emergency generator that is a component of the drinking water system, including one or a combination of:

(a) private residences or public facilities where people sleep (e.g.: single and multi-unit dwellings, nursing homes, hospitals, trailer parks, camping grounds, etc.),
(b) institutional facilities (e.g.: schools, churches, community centres, day care centres, recreational centres, etc.),
(c) outdoor public recreational areas (e.g.: trailer parks, play grounds, picnic areas, etc.), and
(d) other outdoor public areas where there are continuous human activities (e.g.: commercial plazas and office buildings).

"**sub-system**" has the same meaning as in Ontario Regulation 128/04 (Certification of Drinking Water System Operators and Water Quality Analysts) under the SDWA;

"**surface water**" means water bodies (lakes, wetlands, ponds - including dug-outs), water courses (rivers, streams, water-filled drainage ditches), infiltration trenches, and areas of seasonal wetlands;

"UV" means ultraviolet, as in ultraviolet light produced from an ultraviolet reactor.

2.0 Applicability

2.1 In addition to any other applicable legal requirements, the drinking water system identified above shall be established, altered and operated in accordance with the conditions of the drinking water works permit and this licence.

3.0 Licence Expiry

3.1 This licence expires on the date identified as the licence expiry date in Schedule A of this licence.

4.0 Licence Renewal

4.1 Any application to renew this licence shall be made on or before the date identified as the application for licence renewal date set out in Schedule A of this licence.

5.0 Compliance

5.1 The owner and operating authority shall ensure that any person authorized to carry out work on or to operate any aspect of the drinking water system has been informed of the SDWA, all applicable regulations made in accordance with that act, the drinking water works permit and this licence and shall take all reasonable measures to ensure any such person complies with the same.

6.0 Licence and Drinking Water Works Permit Availability

6.1 At least one copy of this licence and the drinking water works permit shall be stored in such a manner that they are readily viewable by all persons involved in the operation of the drinking water system.

7.0 Permit to Take Water and Drinking Water Works Permit

7.1 A permit to take water identified in Schedule A of this licence is the applicable permit on the date identified as the Effective Date of this licence.

7.2 A drinking water works permit identified in Schedule A of this licence is the applicable permit on the date identified as the Effective Date of this licence.

8.0 Financial Plan

8.1 For every financial plan prepared in accordance with subsections 2(1) and 3(1) of O. Reg. 453/07, the owner of the drinking water system shall:

8.1.1 Ensure that the financial plan contains on the front page of the financial plan, the appropriate financial plan number as set out in Schedule A of this licence; and

8.1.2 Submit a copy of the financial plan to the Ministry of Municipal Affairs and Housing within three (3) months of receiving approval by a resolution of municipal council or the governing body of the owner.

9.0 Interpretation

9.1 Where there is a conflict between the provisions of this licence and any other document, the following hierarchy shall be used to determine the provision that takes precedence:

9.1.1 The SDWA*;*

9.1.2 A condition imposed in this licence that explicitly overrides a prescribed regulatory requirement;

9.1.3 A condition imposed in the drinking water works permit that explicitly overrides a prescribed regulatory requirement;

9.1.4 Any regulation made under the SDWA;

9.1.5 Any provision of this licence that does not explicitly override a prescribed regulatory requirement;

9.1.6 Any provision of the drinking water works permit that does not explicitly override a prescribed regulatory requirement;

9.1.7 Any application documents listed in this licence, or the drinking water works permit from the most recent to the earliest; and

9.1.8 All other documents listed in this licence, or the drinking water works permit from the most recent to the earliest.

9.1.9 Any other technical bulletin or procedure issued by the Ministry from the most recent to the earliest.

9.2 If any requirement of this licence or the drinking water works permit is found to be invalid by a court of competent jurisdiction, the remaining requirements of this licence and the drinking water works permit shall continue to apply.

9.3 The issuance of and compliance with the conditions of this licence and the drinking water works permit does not:

9.3.1 Relieve any person of any obligation to comply with any provision of any applicable statute, regulation or other legal requirement, including the *Environmental Assessment Act*, R.S.O. 1990, c. E.18; and

9.3.2 Limit in any way the authority of the appointed Directors and provincial officers of the Ministry to require certain steps be taken or to require the owner to furnish any further information related to compliance with the conditions of this licence or the drinking water works permit.

9.4 For greater certainty, nothing in this licence or the drinking water works permit shall be read to provide relief from regulatory requirements in accordance with section 46 of the SDWA, except as expressly provided in the licence or the drinking water works permit.

10.0 Adverse Effects

10.1 Nothing in this licence or the drinking water works permit shall be read as to permit:

10.1.1 The discharge of a contaminant into the natural environment that causes or is likely to cause an adverse effect; or

10.1.2 The discharge of any material of any kind into or in any waters or on any shore or bank thereof or into or in any place that may impair the quality of the water of any waters.

10.2 All reasonable steps shall be taken to minimize and ameliorate any adverse effect on the natural environment or impairment of the quality of water of any waters resulting from the operation of the drinking water system including such accelerated or additional monitoring as may be necessary to determine the nature and extent of the effect or impairment.

10.3 Fulfillment of one or more conditions imposed by this licence or the drinking water works permit does not eliminate the requirement to fulfill any other condition of this licence or the drinking water works permit.

11.0 Change of Owner or Operating Authority

11.1 This licence is not transferable without the prior written consent of the Director.

11.2 The owner shall notify the Director in writing at least 30 days prior to a change of any operating authority identified in Schedule A of this licence.

11.2.1 Where the change of operating authority is the result of an emergency situation, the owner shall notify the Director in writing of the change as soon as practicable.

12.0 Information to be Provided

12.1 Any information requested by a Director or a provincial officer concerning the drinking water system and its operation, including but not limited to any records required to be kept by this licence or the drinking water works permit, shall be provided upon request.

13.0 Records Retention

13.1 Except as otherwise required in this licence or the drinking water works permit, any records required by or created in accordance with this licence or the drinking water works permit, other than the records specifically referenced in section 12 or section 13 of O. Reg. 170/03, shall be retained for at least 5 years and made available for inspection by a provincial officer, upon request.

14.0 Chemicals and Materials

14.1 All chemicals and materials used in the alteration or operation of the drinking water system that come into contact with water within the system shall meet all applicable standards set by both the American Water Works Association ("AWWA") and the American National Standards Institute ("ANSI") safety criteria standards NSF/60, NSF/61 and NSF/372.

14.1.1 In the event that the standards are updated, the owner may request authorization from the Director to use any on hand chemicals and materials that previously met the applicable standards.

14.2 The most current chemical and material product registration documentation from a testing institution accredited by either the Standards Council of Canada or by the American National Standards Institution ("ANSI") shall be available at all times for each chemical and material used in the operation of the drinking water system that comes into contact with water within the system.

14.3 Conditions 14.1 and 14.2 do not apply in the case of the following:

14.3.1 Water pipe and pipe fittings meeting AWWA specifications made from ductile iron, cast iron, PVC, fibre and/or steel wire reinforced cement pipe or high density polyethylene (HDPE);

14.3.2 Articles made from stainless steel, glass, HDPE or Teflon®;

14.3.3 Cement mortar for watermain lining and for water contacting surfaces of concrete structures made from washed aggregates and Portland cement;

14.3.4 Gaskets that are made from NSF approved materials;

14.3.5 Food grade oils and lubricants, food grade anti-freeze, and other food grade chemicals and materials that are compatible for drinking water use that may come into contact with drinking water, but are not added directly to the drinking water; or

14.3.6 Any particular chemical or material where the owner has written documentation signed by the Director that indicates that the Ministry is satisfied that the chemical or material is acceptable for use within the drinking water system and the chemical or material is only used as permitted by the documentation.

15.0 Drawings

15.1 All drawings and diagrams in the possession of the owner that show any treatment subsystem as constructed shall be retained by the owner unless the drawings and diagrams are replaced by a revised or updated version showing the subsystem as constructed subsequent to the alteration.

15.2 Any alteration to any treatment subsystem shall be incorporated into process flow diagrams, process and instrumentation diagrams, and record drawings and diagrams within one year of the alteration being completed or placed into service.

15.3 Process flow diagrams and process and instrumentation diagrams for any treatment subsystem shall be kept in a place, or made available in such a manner, that they may be readily viewed by all persons responsible for all or part of the operation of the drinking water system.

16.0 Operations and Maintenance Manual

16.1 An up-to-date operations and maintenance manual or manuals shall be maintained and applicable parts of the manual or manuals shall be made available for reference to all persons responsible for all or part of the operation or maintenance of the drinking water system.

16.2 The operations and maintenance manual or manuals, shall include at a minimum:

16.2.1 The requirements of this licence and associated procedures;

16.2.2 The requirements of the drinking water works permit for the drinking water system;

16.2.3 A description of the processes used to achieve primary and secondary disinfection within the drinking water system including where applicable:

a) A copy of the CT calculations that were used as the basis for primary disinfection under worst case operating conditions and other operating conditions, if applicable; and

b) The validated operating conditions for UV disinfection equipment, including a copy of the validation certificate;

16.2.4 Procedures for monitoring and recording the in-process parameters necessary for the control of any treatment subsystem and for assessing the performance of the drinking water system;

16.2.5 Procedures for the operation and maintenance of monitoring equipment;

16.2.6 Contingency plans and procedures for the provision of adequate equipment and material to deal with emergencies, upset conditions and equipment breakdown;

16.2.7 Procedures for dealing with complaints related to the drinking water system, including the recording of the nature of the complaint and any investigation and corrective action taken in respect of the complaint;

16.3 Procedures necessary for the operation and maintenance of any alterations to the drinking water system shall be incorporated into the operations and maintenance manual or manuals prior to those alterations coming into operation.

16.4 All of the procedures included or referenced within the operations and maintenance manual must be implemented.

Schedule C: System-Specific Conditions

System Owner	**The Corporation of the Town of Fort Frances**
Licence Number	**224-101**
Drinking Water System Name	**Fort Frances Drinking Water System**
Licence Effective Date	**February 15, 2022**

1.0 System Performance

Rated Capacity

1.1 For each treatment subsystem listed in column 1 of Table 1, the maximum daily volume of treated water that flows from the treatment subsystem to the distribution system shall not exceed the value identified as the rated capacity in column 2 of the same row.

Table 1: Rated Capacity

Column 1 Treatment Subsystem Name	Column 2 Rated Capacity (m^3/day)
Fort Frances Water Treatment Plant	17,000

Maximum Flow Rates

1.2 For each treatment subsystem listed in column 1 of Table 2, the maximum flow rate of water that flows into a treatment subsystem component listed in column 2 shall not exceed the value listed in column 3 of the same row.

Table 2: Maximum Flow Rates

Column 1 Treatment Subsystem Name	Column 2 Treatment Subsystem Component	Column 3 Maximum Flow Rate (L/s)
Not Applicable	Not Applicable	Not Applicable

1.3 Despite conditions 1.1 and 1.2, a treatment subsystem may be operated temporarily at a maximum daily volume and/or a maximum flow rate above the values set out in column 2 of Table 1 and column 3 of Table 2 respectively for the purposes of fighting a large fire or for the maintenance of the drinking water system.

1.4 Condition 1.3 does not authorize the discharge into the distribution system of any water that does not meet all of the requirements of this licence and all other regulatory requirements, including compliance with the Ontario Drinking Water Quality Standards.

Residuals Management

1.5 In respect of an effluent discharged into the natural environment from a treatment subsystem or treatment subsystem component listed in column 1 of Table 3:

1.5.1 The annual average concentration of a test parameter identified in column 2 shall:

a) not exceed the value in column 3 of the same row; and

b) be calculated at least once monthly as the running annual average based on the previous twelve months of results;

1.5.2 Where the average concentration of a test parameter identified in column 2 exceeds the value in column 3, the concentration shall be reported to the local Ministry district office within 72 hours of receipt of the last lab result used in the calculation;

1.5.3 The maximum concentration of a test parameter identified in column 2 shall not exceed the value in column 4 of the same row;

1.5.4 Where the maximum concentration of a test parameter identified in column 2 exceeds the value in column 4, the discharge shall be reported in accordance with s.13.2 of O. Reg. 675.98 and recorded in accordance with s.12.2 of O. Reg. 675.98 within 24 hours of receipt of the lab result; and,

1.5.5 The test parameters listed in column 2 of Table 3 shall be sampled in accordance with conditions 5.2, 5.3 and 5.4 of Schedule C in this Licence.

Table 3: Residuals Management

Column 1 Treatment Subsystem or Treatment Subsystem Component Name	Column 2 Test Parameter	Column 3 Annual Average Concentration (mg/L)	Column 4 Maximum Concentration (mg/L)
Media filter backwash effluent	Total Suspended Solids	25	Not Applicable

UV Disinfection Equipment Performance

1.6 For each treatment subsystem or treatment subsystem component listed in column 1 of Table 4, and while directing water to the distribution system and being used to meet pathogen log removal/inactivation credits specified in Schedule E:

1.6.1 The UV disinfection equipment shall be operated within the validated limits for the equipment at all times such that a continuous pass-through UV dose is maintained throughout the life time of the UV lamp(s) that is at least the minimum continuous pass-through UV dose set out in column 2 of the same row

1.6.2 In addition to any other sampling, analysis and recording that may be required, the ultraviolet light disinfection equipment shall test for the test parameters set

out in column 4 of the same row at a testing frequency of once every five (5) minutes or less and record the test data at a recording frequency of once every four (4) hours or less;

1.6.3 If there is a UV disinfection equipment alarm signaling that the disinfection equipment is malfunctioning, has lost power, or is not providing the appropriate level of disinfection the test parameters set out in column 4 of the same row shall be recorded at a recording frequency of once every five minutes or less until the alarm condition has been corrected;

1.6.4 A monthly summary report shall be prepared at the end of each calendar month which sets out the time, date and duration of each UV equipment alarm described in condition 1.6.3, the volume of water treated during each alarm period and the actions taken by the operating authority to correct the alarm situation;

Table 4: UV Disinfection Equipment

Column 1 Treatment Subsystem or Treatment Subsystem Component Name	Column 2 Minimum Continuous Pass-Through UV Dose (mJ/cm^2)	Column 3 Control Strategy	Column 4 Test Parameter
Not Applicable	Not Applicable	Not Applicable	Not Applicable

2.0 Flow Measurement and Recording Requirements

2.1 For each treatment subsystem identified in column 1 of Table 1 and in addition to any other flow measurement and recording that may be required, continuous flow measurement and recording shall be undertaken for:

2.1.1 The flow rate (L/s) and daily volume (m^3/day) of treated water that flows from the treatment subsystem to the distribution system.

2.1.2 The flow rate (L/s) and daily volume (m^3/day) of water that flows into the treatment subsystem.

2.2 For each treatment subsystem component identified in column 2 of Table 2 and in addition to any other flow measurement and recording that may be required, continuous flow measurement and recording shall be undertaken for the flow rate and daily volume of water that flows into the treatment subsystem component.

2.3 Where a rated capacity from Table 1 or a maximum flow rate from Table 2 is exceeded, the following shall be recorded:

2.3.1 The difference between the measured amount and the applicable rated capacity or maximum flow rate specified in Table 1 or Table 2;

2.3.2 The time and date of the measurement;

2.3.3 The reason for the exceedance; and

2.3.4 The duration of time that lapses between the applicable rated capacity or maximum flow rate first being exceeded and the next measurement where the applicable rated capacity or maximum flow rate is no longer exceeded.

3.0 Calibration of Flow Measuring Devices

3.1 All flow measuring devices that are required by regulation, by a condition in the drinking water works permit 224-201, or by a condition otherwise imposed by the Ministry, shall be checked and where necessary calibrated in accordance with the manufacturer's instructions.

3.2 If the manufacturer's instructions do not indicate how often to check and calibrate a flow measuring device, the equipment shall be checked and where necessary calibrated at least once every 12 months during which the drinking water system is in operation.

3.2.1 For greater certainty, if condition 3.2 applies, the equipment shall be checked and where necessary calibrated not more than 30 days after the first anniversary of the day the equipment was checked and calibrated in the previous 12-month period.

4.0 Calibration of CT Monitoring System

4.1 Any measuring instrumentation that forms part of the monitoring system for CT shall be checked and where necessary calibrated at least once every 12 months during which the drinking water system is in operation, or more frequently in accordance with the manufacturer's instructions.

4.1.1 For greater certainty, if condition 4.1 applies, the instrumentation shall be checked and where necessary calibrated not more than 30 days after the first anniversary of the day the equipment was checked and calibrated in the previous 12-month period.

5.0 Additional Sampling, Testing and Monitoring

Drinking Water Health and Non-Health Related Parameters

5.1 For each treatment subsystem or treatment subsystem component identified in column 1 of Tables 5 and 6 and in addition to any other sampling, testing and monitoring that may be required, sampling, testing and monitoring shall be undertaken for a test parameter listed in column 2 at the sampling frequency listed in column 3 and at the monitoring location listed in column 4 of the same row.

Table 5: Drinking Water Health Related Parameters			
Column 1 Treatment Subsystem or Treatment Subsystem Component Name	**Column 2 Test Parameter**	**Column 3 Sampling Frequency**	**Column 4 Monitoring Location**
Not Applicable	Not Applicable	Not Applicable	Not Applicable

Table 6: Drinking Water Non-Health Related Parameters			
Column 1 Treatment Subsystem or Treatment Subsystem Component Name	**Column 2 Test Parameter**	**Column 3 Sampling Frequency**	**Column 4 Monitoring Location**
Not Applicable	Not Applicable	Not Applicable	Not Applicable

Environmental Discharge Parameters

5.2 For each treatment subsystem or treatment subsystem component identified in column 1 of Table 7 and in addition to any other sampling, testing and monitoring that may be required, sampling, testing and monitoring shall be undertaken for a test parameter listed in column 2 using the sample type identified in column 3 at the sampling frequency listed in column 4 and at the monitoring location listed in column 5 of the same row.

5.3 For the purposes of Table 7:

5.3.1 Manual Composite means the mean of at least three grab samples taken during a discharge event, with one sample being taken immediately following the commencement of the discharge event, one sample being taken approximately at the mid-point of the discharge event and one sample being taken immediately before the end of the discharge event; and

5.3.2 Automated Composite means samples must be taken during a discharge event by an automated sampler at a minimum sampling frequency of once per hour.

5.4 Any sampling, testing and monitoring for the test parameter Total Suspended Solids shall be performed in accordance with the requirements set out in the publication “Standard Methods for the Examination of Water and Wastewater”, 23rd Edition, 2017, or as amended from time to time by more recently published editions.

Table 7: Environmental Discharge Parameters				
Column 1 Treatment Subsystem or Treatment Subsystem Component Name	**Column 2 Test Parameter**	**Column 3 Sample Type**	**Column 4 Sampling Frequency**	**Column 5 Monitoring Location**
Fort Frances Water Treatment Plant	Total Suspended Solids	Composite	Monthly	Top of filter (for point of discharge to Rainy River)

5.5 Pursuant to Condition 10 of Schedule B of this licence, the owner may undertake the following environmental discharges associated with the maintenance and/or repair of the drinking water system:

5.5.1 The discharge of potable water from a watermain to a road or storm sewer;

5.5.2 The discharge of potable water from a water storage facility or pumping station:

a) To a road or storm sewer; or

b) To a watercourse where the discharge has been dechlorinated and if necessary, sediment and erosion control measures have been implemented.

5.5.3 The discharge of dechlorinated non-potable water from a watermain, water storage facility or pumping station to a road or storm sewer;

5.5.4 The discharge of raw water from a groundwater well to the environment where if necessary, sediment and erosion control measures have been implemented; and

5.5.5 The discharge of raw water, potable water or non-potable water from a treatment subsystem to the environment where if necessary, the discharge has been dechlorinated and sediment and erosion control measures have been implemented.

5.5.6 The discharge of any excess water to a road, storm sewer or the environment, associated with the management of materials excavated as part of watermain construction or repair, where necessary sediment, erosion and environmental control measures have been implemented.

6.0 Studies Required

Harmful Algal Blooms

6.1 The owner shall develop and keep up to date a Harmful Algal Bloom monitoring, reporting and sampling plan, herein known as the “Plan”, to be implemented when a potential harmful algal bloom is suspected or present. The owner shall have the Plan in place on or before October 28, 2021.

6.1.1 The owner must have a copy of the Plan available onsite at the drinking water system, for inspection upon request by Ministry staff.

6.1.2 The owner must implement the Plan annually during the harmful algal bloom season, during but not limited to the warm seasonal period between June 1 and October 31 each year, or as otherwise directed by the Ministry or the Medical Officer of Health.

6.1.3 The owner must train all relevant drinking water system staff on the Plan prior to the beginning of each warm season, as described in Condition 6.1.2.

6.2 For clarity, a Harmful Algal Bloom is considered suspected or occurring when:

6.2.1 the owner or operating authority has observed an algal bloom:

a) near the shoreline at or near the source water intake(s) described in drinking water works permit #224-201, or

b) where the intake has an Intake Protection Zone in a source protection plan, within IPZ-1, or

c) within a circle that has a radius, measured from the intake, equal to the distance from the intake to the farthest edge of IPZ-2.

6.2.2 microcystin has been detected in a raw or treated water sample; and/or,

6.2.3 the owner has received any form of notification related to an algal bloom from the Ministry, a Medical Officer of Health, or the public; or,

6.2.4 the presence of or identification of cyanobacteria has been determined though optical probes or other analytic techniques used by the drinking water system.

6.3 The Plan described in condition 6.1 must include, at a minimum:

6.3.1 details relating to visual monitoring for harmful algal blooms at or near the drinking water system intake(s),

a) as described in drinking water works permit #224-101, or

b) where the intake has an Intake Protection Zone in a source protection plan, within IPZ-1, or

c) within a circle that has a radius, measured from the intake, equal to the distance from the intake to the farthest edge of IPZ-2.

6.3.2 details relating to visual monitoring of shoreline; this is applicable to drinking water systems where the proximity of the intake(s) may be of concern.

6.3.3 details relating to reporting the observed or suspected harmful algal bloom, as described in section 6.2:

a) to the Overall Responsible Operator(s) and/or Operator(s)-in-Charge if the blooms have been observed or suspected by a duty operator; the Plan shall include wording that directs relevant drinking water staff to follow the instructions provided by the Overall Responsible Operator(s) or the Operator(s)-in-Charge;

b) to the medical officer of health; and

c) to the local MECP representative and the Ministry's Spills Action Centre.,

6.3.4 a sampling plan, including the identification of sample location(s) and frequencies that at a minimum match those described in condition 6.4.

6.3.5 triggers that may increase the required sampling frequency;

6.3.6 up-to-date records that document staff training on the harmful algal bloom monitoring, reporting, and sampling procedures.

6.4 Any water samples collected under Condition 6.3.4 must be:

6.4.1 collected, at a minimum, once per week, or as otherwise directed by the Ministry or the medical officer of health;

6.4.2 collected prior to any treatment, if the sample is taken from raw water;

6.4.3 collected at the point of entry into the distribution system, if the sample is taken from treated water;

6.4.4 collected from the shoreline by the drinking water system, if applicable based on Condition 6.3.1;

6.4.5 submitted to a laboratory licensed to perform ELISA testing for total microcystin;

6.4.6 repeatedly collected until 3 consecutive samples have shown non-detection of microcystin and the algal bloom is no longer suspected or visually observed.

7.0 Source Protection

7.1 The owner of the drinking water system shall implement risk management measures, as appropriate, to manage any potential threat to drinking water that results from the operation of the drinking water system.

7.2 The owner of the system shall notify the Director in writing within thirty (30) days of any approved changes to an applicable source protection plan that impact the assessed threat level of a fuel oil system identified in Schedule A of drinking water works permit.

7.3 The notification required in condition 7.2 shall include:

7.3.1 A description of the changes and their impact on the assessed threat level of the fuel oil system(s); and,

7.3.2 A timeline for re-assessing the threat level and providing the results of the assessment to the Director.

Schedule D: Conditions for Relief from Regulatory Requirements

System Owner	**The Corporation of the Town of Fort Frances**
Licence Number	**224-101**
Drinking Water System Name	**Fort Frances Drinking Water System**
Licence Effective Date	**February 15, 2022**

As of the effective date of the Licence, no relief from regulatory requirements is authorized by the Director under section 46 of the SDWA in respect of the drinking water system.

Schedule E: Pathogen Log Removal/Inactivation Credits

System Owner	**The Corporation of the Town of Fort Frances**
Licence Number	**224-101**
Drinking Water System Name	**Fort Frances Drinking Water System**
Licence Effective Date	**February 15, 2022**

1.0 Primary Disinfection Pathogen Log Removal/Inactivation Credits

Fort Frances Water Treatment Plant

Rainy River [SURFACE WATER]

Minimum Log Removal/ Inactivation Required	Cryptosporidium Oocysts	Giardia Cysts [a]	Viruses [b]
Fort Frances Water Treatment Plant	2	3	4

[a] At least 0.5 log inactivation of Giardia shall be achieved by the disinfection portion of the overall water treatment process.
[b] At least 2 log inactivation of viruses shall be achieved by disinfection.

Log Removal/Inactivation Credits Assigned [c]	Cryptosporidium Oocysts	Giardia Cysts	Viruses
Conventional Filtration	2	2.5	2
Chlorination [CT: Contact chamber, clearwell/reservoir and high lift pump chamber]	-	0.5	2+

[c] Log removal/inactivation credit assignment is based on each treatment process being fully operational and the applicable log removal/inactivation credit assignment criteria being met.

Treatment Component	Log Removal/Inactivation Credit Assignment Criteria
Conventional Filtration	1. A chemical coagulant shall be used at all times when the treatment plant is in operation; 2. Chemical dosages shall be monitored and adjusted in response to variations in raw water quality; 3. Effective backwash procedures shall be maintained including filter-to-waste or an equivalent procedure during filter ripening to ensure that effluent turbidity requirements are met at all times; 4. Filtrate turbidity shall be continuously monitored from each filter; and 5. Performance criterion for filtered water turbidity of less than or equal to 0.3 NTU in 95% of the measurements each month shall be met for each filter.
Chlorination	1. Sampling and testing for free chlorine residual shall be carried out by continuous monitoring equipment in the treatment process at or near a location where the intended contact time has just been completed in accordance with the Ministry's Procedure for Disinfection of Drinking Water in Ontario; and 2. At all times, CT provided shall be greater than or equal to the CT required to achieve the log removal credits assigned.
Primary Disinfection Notes	

Appendix "B"

DRINKING WATER WORKS PERMIT
Licence Number: 224-101
Issue Number: 3

Ontario

DRINKING WATER WORKS PERMIT

Permit Number: 224-201
Issue Number: 3

Pursuant to the *Safe Drinking Water Act*, 2002, S.O. 2002, c. 32, and the regulations made thereunder and subject to the limitations thereof, I hereby issue this drinking water works permit under Part V of the *Safe Drinking Water Act*, 2002, S.O. 2002, c. 32 to:

The Corporation of the Town of Fort Frances

320 Portage Avenue
Fort Frances, ON
P9A 3P9

For the following municipal residential drinking water system:

Fort Frances Drinking Water System

This drinking water works permit includes the following:

Schedule	Description
Schedule A	Drinking Water System Description
Schedule B	General
Schedule C	All documents issued as Schedule C to this drinking water works permit which authorize alterations to the drinking water system
Schedule D	Process Flow Diagrams

Upon the effective date of this drinking water works permit #224-201, all previously issued versions of permit #224-201 are revoked and replaced by this permit.

DATED at TORONTO this 11th day of May, 2021

Signature

A. Ahmed

Aziz Ahmed, P.Eng.
Director
Part V, *Safe Drinking Water Act*, 2002

Schedule A: Drinking Water System Description

System Owner	**The Corporation of the Town of Fort Frances**
Permit Number	**224-201**
Drinking Water System Name	**Fort Frances Drinking Water System**
Permit Effective Date	**May 11, 2021**

1.0 System Description

1.1 The following is a summary description of the works comprising the above drinking water system:

Overview

The **Fort Frances Drinking Water System** consists of a drinking water treatment plant, a two-celled storage ground reservoir, an elevated storage tank and approximately 6.0 kilometers of trunk watermains and 70.4 kilometers of distribution watermains.

The Fort Frances Water Treatment Plant is a conventional surface water treatment plant. Raw water is drawn from Rainy River through low lift pumps. Liquid alum is added to the raw water ahead of the in-line mixer for coagulation while polyelectrolytes are added to the solids contact tanks for assisting flocculation. The water then flows to the two solids contact clarifiers units, operating in parallel, where flocculation and sedimentation occurs. The settled floc is disposed of to the sanitary sewer. Powdered activated carbon, soda ash, and hydrofluosilicic are also added ahead of in-line mixer, in solids contact clarifiers, and/or in chemical contact chambers, as needed, for taste and odour and pH adjustment. The settled effluent is gravity fed to four dual media gravity sand filters. The filters are equipped with a backwash pump. The filtered water flows to a two-celled, ground storage reservoir through a chemical contact chamber. Chlorine and fluoride are added in the chemical contact chamber. The treated water then flows to the high lift pump wells where it is pumped to the distribution system. Chlorine residual and fluoride are monitored with continuous on-line analyzers just prior to the water leaving the plant. The Fort Frances Drinking Water System also includes an elevated water storage tank within the distribution system equipped with re-chlorination facilities.

The Fort Frances Drinking Water System provides drinking water to the Couchiching First Nation (borders the northeast limits of the Town) and five sites on Agency 1 Land (Rusty Myers Flying Service Ltd., Treaty 3 Police Station, Nanicost Ltd., Gizhewaadiziwin Health Access Centre, and Seven Generations Educational Institute). The Fort Frances Drinking Water System also provides Drinking water to the Friesen 5 Apartment Units located in Alberton Township, outside the limits of the Town of Fort Frances.

Fort Frances Water Treatment Plant

Treatment Plant

Location and General Description

Name	Fort Frances Water Treatment Plant housed in an approximately 46 m by 32 m masonry structure
Street Address	901 Colonization Road East
UTM Coordinates	NAD 83: Zone 15 +/- 10m: Easting 472938: Northing 5384735
System Type	Treatment, storage and distribution
Notes	Houses screen chamber, low and high lift pumps, solids contact clarifiers, filters, chemical storage and feeding equipment, instrumentation and control, an administration area comprising of an office, lunchroom, washrooms and control room/laboratory

Surface Water Supply

Raw Water Intake

Description	Approximately 190 m of 630 mm diameter intake pipe located in the Rainy River including an upturned elbow intake structure with a coarse bar screen
Source	Rainy River
Location	Approximately 190 m east of the Water Treatment Plant in Rainy River
Notes	

Low Lift Works

Screens

Description	A raw water screen chamber equipped with two sets of screens
Dimensions	Each screen 2.25 m^2 in area
Notes	Screen chamber located ahead of raw water pumping well

Low Lift Pumps

Description	Three (3) vertical turbine low lift pumps
Capacity	- Two (2) pumps rated at 100 L/s against a total dynamic head (TDH) of 14 m - One (1) VFD pump capable of providing flows in the range of 40 to 150 L/s against a total dynamic head (TDH) of 14m
Metering Device	Equipped with one metering device for measuring raw water flows
Notes	

Coagulation

In-Line Mixer

Description	An in-line mixer located downstream of the low lift pumps within the influent (raw water) line to facilitate the dosing of liquid alum, activated carbon slurry and soda ash solution
Dimensions	450 mm diameter
Notes	Located between low lift pumps and solids contact clarifiers

Flocculation/Clarification

Flocculation/Clarification Tanks - Solids Contact Clarifiers

Description	Two (2) solids contact clarifier units, operating in parallel equipped with facilities for polymer dosing
Dimensions	Each solids contact clarifier approximately 13.7 m x 13.7 m x 3.75 m side water depth (s.w.d.)
Notes	The settled floc is discharged to sanitary sewer

Filtration

Filters

Description	Four (4) dual media, gravity filters (sand and anthracite)
Dimensions	Each filter approximately 4.9 m x 4.9 m providing a total filtration area of 96 m^2
Equipment	One (1) vertical turbine backwash pump capable of delivering 290.3 L/s at 14 m TDH
	A turbidimeter on each filter
	All filters equipped with an underdrain and air scouring system
Notes	

Instrumentation and Control

SCADA System

Description	A computerized control system monitoring the critical components of the process including raw and finished water quantity and quality
Equipment	Four (4) turbidimeters for continuously monitoring filter effluent
	One (1) laboratory model turbidimeter for manual testing
	One (1) continuous chlorine/fluoride analyzer monitoring free chlorine and fluoride residual in the discharge pipe of the high lift pumps
	Three (3) flowmeters to measure flow at various locations
Notes	Status of the elevated storage tank by telemetry, receiving alarms and controlling the operation

Waste Residual Management

Outfall Pipe

Description	Filter backwash disposal
Dimensions	Approximately 60 m of 800 mm diameter pipe
	One (1) vertical turbine backwash pump capable of delivering 290.3 L/s at 14 m TDH
Notes	Filter backwash water returned to Rainy River through outfall line

Sludge Disposal

Description	Solids contact clarifier settled sludge disposal
Equipment	Settled sludge discharged through a 150 mm pipe using pneumatic blow down valves - gravity system, no pumps utilized
Notes	Solids contact clarifier settled sludge discharged to the sanitary sewer system

High Lift Works

High Lift Pumps

Description	Four (4) vertical turbine high lift pumps and one (1) diesel engine driven vertical turbine fire pump
Capacity	Two (2) vertical turbine pumps rated at 63.1 L/s. at TDH of 55m
	One (1) vertical turbine pump rated at 94.7 L/s at TDH of 55m
	One (1) vertical turbine pump rated at 126.2 L/s at a TDH of 55m
High Lift Pump Chamber	470 m^3 capacity
Notes	

On-Site Storage

Chemical Contact Chamber

Description	One (1) chemical contact chamber to provide chlorine contact time
Volume	240 m^3
Notes	

Clearwell/Reservoir

Description	Two-celled, ground storage reservoir
Capacity	Cell No. 1 = 2,565 m^3 Cell No. 2 = 1,465 m^3 Total = 4,030 m^3
Notes	The two cells receive filtered water after passing through chemical contact chamber

Emergency Power

Backup Power Supply

Description	One (1) 450 kW diesel generator set for use during power outage situations
Notes	

Fuel Oil Systems

Fuel Storage Locations

Location	901 Colonization Road East NAD 83: Zone 15 +/- 10m: Easting 472938: Northing 5384735
Description	3785 litres, double walled, integrated sub-base fuel tank for the diesel generator
Fuel Type	Diesel
Source Protection Area	Not Applicable
Notes	

Chemical Addition

Alum

Description	Alum feed system for coagulation
Feed Point	Liquid alum to the raw water ahead of the in-line mixer for coagulation
Equipment	A chemical metering pump
	A day tank with secondary spill containment
Notes	

Chlorine

Description	Chlorine gas disinfection System
Feed Point(s)	1. Chemical contact chamber; and 2. Before the flash mixer
Equipment	One (1) duty chlorinator
	One (1) standby chlorinator including: - two (2) chlorine cylinders with an automatic switch over device in a separate room - a weight scale - one (1) chemical metering pump - a free chlorine analyzer for monitoring finished water residuals
Notes	

Hydrofluosilicic Acid

Description	Fluoridation system
Feed Point	Chemical Contact Chamber
Equipment	One (1) day tank
	One (1) chemical metering pump
	Secondary spill containment
Notes	

Polyelectrolytes/Polymer

Description	- A polyelectrolytes feed system for assisting in flocculation - A polymer feed system for assisting in flocculation (used as back-up)
Feed Point	Solids Contact Clarifiers
Equipment	- Two (2) chemical metering pumps for polyelectrolytes injection complete with aging and batch tanks - Two (2) chemical metering pumps for polymer injection complete with aging and solution tanks (used as back-up)
Notes	

Powdered Activated Carbon

Description	Powdered activated carbon for taste and odor control
Feed Point	Ahead of in-line mixer or solids contact clarifiers
Equipment	One (1) slurry tank
	One (1) chemical metering pump
	Secondary spill containment
	A dust control system
Notes	

Soda Ash

Description	Soda ash dosing system for pH adjustment
Feed Point #1	Chemical contact chamber
Feed Point #2	Solid contact clarifiers
Feed Point #3	In-line mixture
Equipment	A silo inside the building
	One (1) day tank
	Volumetric feeder
	A dust collector
Notes	

Elevated Storage Tank

Description	An elevated storage tank
Location	South-east side of the intersection of Colonization Road West and McIrvine Road
UTM Coordinates	NAD 83: Zone 15 +/- 10: Easting 468540: Northing 5383616
Capacity	4,500 m^3
Equipment	Includes calcium hypochlorite re-chlorination facility along with: - a telemetry system providing the water level information to the main computer at the plant; and - a looped circulation system
Notes	

Watermains

1.2 Watermains within the distribution system comprise:

1.2.1 Watermains that have been set out in each document or file identified in column 1 of Table 1.

Table 1: Watermains	
Column 1 **Document or File Name**	**Column 2** **Date**
PDF File Name: Distribution Map.pdf Title: Water Distribution System, November 10, 2020	November 10, 2020

1.2.2 Watermains that have been added, modified, replaced or extended further to the provisions of Schedule C of this drinking water works permit on or after the date identified in column 2 of Table 1 for each document or file identified in column 1.

1.2.3 Watermains that have been added, modified, replaced or extended further to an authorization by the Director on or after the date identified in column 2 of Table 1 for each document or file identified in column 1.

Schedule B: General

System Owner	**The Corporation of the Town of Fort Frances**
Permit Number	**224-201**
Drinking Water System Name	**Fort Frances Drinking Water System**
Permit Effective Date	**May 11, 2021**

1.0 Applicability

1.1 In addition to any other applicable legal requirements, the drinking water system identified above shall be altered and operated in accordance with the conditions of this drinking water works permit and the licence #224-101.

1.2 The definitions and conditions of licence #224-101 are incorporated into this permit and also apply to this drinking water system.

2.0 Alterations to the Drinking Water System

2.1 Any document issued by the Director to be incorporated into Schedule C to this drinking water works permit shall provide authority to alter the drinking water system in accordance with the applicable conditions of this drinking water works permit and licence #224-101.

2.2 All documents issued by the Director as described in condition 2.1 shall form part of this drinking water works permit.

2.3 All parts of the drinking water system in contact with drinking water that are added, modified, replaced, extended shall be disinfected in accordance with a procedure approved by the Director or in accordance with the applicable provisions of the following documents:

a) Until November 9, 2021 the ministry's Watermain Disinfection Procedure, dated November 2015. As of November 10, 2021 the ministry's Watermain Disinfection Procedure, dated August 1, 2020;
b) Subject to condition 2.3.2, any updated version of the ministry's Watermain Disinfection Procedure;
c) AWWA C652 – Standard for Disinfection of Water-Storage Facilities;
d) AWWA C653 – Standard for Disinfection of Water Treatment Plants; and
e) AWWA C654 – Standard for Disinfection of Wells.

2.3.1 For greater clarity, where an activity has occurred that could introduce contamination, including but not limited to repair, maintenance, or physical / video inspection, all equipment that may come in contact with the drinking water system shall be disinfected in accordance with the requirements of condition 2.3. above.

2.3.2 Updated requirements described in condition 2.3 b) are effective six months from the date of publication of the updated Watermain Disinfection Procedure.

2.4 The owner shall notify the Director in writing within thirty (30) days of the placing into service or the completion of any addition, modification, replacement, removal or extension of the drinking water system which had been authorized through:

2.4.1 Schedule B to this drinking water works permit which would require an alteration of the description of a drinking water system component described in Schedule A of this drinking water works permit;

2.4.2 Any document to be incorporated in Schedule C to this drinking water works permit respecting works other than watermains; or

2.4.3 Any approval issued prior to the issue date of the first drinking water works permit respecting works other than watermains which were not in service at the time of the issuance of the first drinking water works permit.

2.5 The notification required in condition 2.4 shall be submitted using the "Director Notification Form" published by the Ministry.

2.6 For greater certainty, the notification requirements set out in condition 2.4 do not apply to any addition, modification, replacement, removal or extension in respect of the drinking water system which:

2.6.1 Is exempt from subsection 31(1) of the SDWA by subsection 9.(2) of O. Reg. 170/03;

2.6.2 Constitutes maintenance or repair of the drinking water system; or

2.6.3 Is a watermain authorized by condition 3.1 of Schedule B of this drinking water works permit.

2.7 The owner shall notify the legal owner of any part of the drinking water system that is prescribed as a municipal drinking water system by section 2 of O. Reg. 172/03 of the requirements of the licence and this drinking water works permit as applicable to the prescribed system.

2.8 For greater certainty, the owner may only carry out alterations to the drinking water system in accordance with this drinking water works permit after having satisfied other applicable legal obligations, including those arising from the *Environmental Assessment Act*, *Niagara Escarpment Planning and Development Act*, *Oak Ridges Moraine Conservation Act, 2001* and *Greenbelt Act, 2005*.

3.0 Watermain Additions, Modifications, Replacements and Extensions

3.1 The owner may alter the drinking water system, or permit it to be altered by a person acting on the owner's behalf, by adding, modifying, replacing or extending a watermain within the distribution system subject to the following conditions:

3.1.1 The design of the watermain addition, modification, replacement or extension:

a) Has been prepared by a licensed engineering practitioner;

b) Has been designed only to transmit water and has not been designed to treat water;

c) Satisfies the design criteria set out in the Ministry publication "Watermain Design Criteria for Future Alterations Authorized under a Drinking Water Works Permit – June 2012", as amended from time to time; and

d) Is consistent with or otherwise addresses the design objectives contained within the Ministry publication "Design Guidelines for Drinking Water Systems, 2008", as amended from time to time.

3.1.2 The maximum demand for water exerted by consumers who are serviced by the addition, modification, replacement or extension of the watermain will not result in an exceedance of the rated capacity of a treatment subsystem or the maximum flow rate for a treatment subsystem component as specified in the licence, or the creation of adverse conditions within the drinking water system.

3.1.3 The watermain addition, modification, replacement or extension will not adversely affect the distribution system's ability to maintain a minimum pressure of 140 kPa at ground level at all points in the distribution system under maximum day demand plus fire flow conditions.

3.1.4 Secondary disinfection will be provided to water within the added, modified, replaced or extended watermain to meet the requirements of O. Reg. 170/03.

3.1.5 The watermain addition, modification, replacement or extension is wholly located within the municipal boundary over which the owner has jurisdiction.

3.1.6 The owner of the drinking water system consents in writing to the watermain addition, modification, replacement or extension.

3.1.7 A licensed engineering practitioner has verified in writing that the watermain addition, modification, replacement or extension meets the requirements of condition 3.1.1.

3.1.8 The owner of the drinking water system has verified in writing that the watermain addition, modification, replacement or extension meets the requirements of conditions 3.1.2 to 3.1.6.

3.2 The authorization for the addition, modification, replacement or extension of a watermain provided for in condition 3.1 does not include the addition, modification, replacement or extension of a watermain that:

3.2.1 Passes under or through a body of surface water, unless trenchless construction methods are used;

3.2.2 Has a nominal diameter greater than 750 mm;

3.2.3 Results in the fragmentation of the drinking water system; or

3.2.4 Connects to another drinking water system, unless:

a) Prior to construction, the owner of the drinking water system seeking the connection obtains written consent from the owner or owner's delegate of the drinking water system being connected to; and

b) The owner of the drinking water system seeking the connection retains a copy of the written consent from the owner or owner's delegate of the drinking water system being connected to as part of the record that is recorded and retained under condition 3.3.

3.3 The verifications required in conditions 3.1.7 and 3.1.8 shall be:

3.3.1 Recorded on "Form 1 – Record of Watermains Authorized as a Future Alteration", as published by the Ministry, prior to the watermain addition, modification, replacement or extension being placed into service; and

3.3.2 Retained for a period of ten (10) years by the owner.

3.4 For greater certainty, the verification requirements set out in condition 3.3 do not apply to any addition, modification, replacement or extension in respect of the drinking water system which:

3.4.1 Is exempt from subsection 31(1) of the SDWA by subsection 9.(2) of O. Reg. 170/03; or

3.4.2 Constitutes maintenance or repair of the drinking water system.

3.5 The document or file referenced in Column 1 of Table 1 of Schedule A of this drinking water works permit that sets out watermains shall be retained by the owner and shall be updated to include watermain additions, modifications, replacements and extensions within 12 months of the addition, modification, replacement or extension.

3.6 The updates required by condition 3.5 shall include watermain location relative to named streets or easements and watermain diameter.

3.7 Despite clause (a) of condition 3.1.1 and condition 3.1.7, with respect to the replacement of an existing watermain or section of watermain that is 6.1 meters in length or less, if a licensed engineering practitioner has:

3.7.1 inspected the replacement prior to it being put into service;

3.7.2 prepared a report confirming that the replacement satisfies clauses (b), (c) and (d) of condition 3.1.1 (i.e. "Form 1 – Record of Watermains Authorized by a Future Alteration" (Form 1), Part 3, items No. 2, 3 and 4); and

3.7.3 appended the report referred to in condition 3.7.2 to the completed Form 1,

the replacement is exempt from the requirements that the design of the replacement be prepared by a licensed engineering practitioner and that a licensed engineering practitioner verify on Form 1, Part 3, item No. 1 that a licensed engineering practitioner prepared the design of the replacement.

3.8 For greater certainty, the exemption in condition 3.7 does not apply to the replacement of an existing watermain or section of watermain if two or more sections of pipe, each of which is 6.1 meters in length or less, are joined together, if the total length of replacement pipes joined together is greater than 6.1 meters.

4.0 Minor Modifications to the Drinking Water System

4.1 The drinking water system may be altered by adding, modifying or replacing the following components in the drinking water system:

4.1.1 Coagulant feed systems in the treatment system, including the location and number of dosing points:

a) Prior to making any alteration to the drinking water system under condition 4.1.1, the owner shall undertake a review of the impacts that the alteration might have on corrosion control or other treatment processes; and

b) The owner shall notify the Director in writing within thirty (30) days of any alteration made under condition 4.1.1 and shall provide the Director with a copy of the review.

c) The notification required in condition 4.1.1 b) shall be submitted using the "Director Notification Form" published by the Ministry

4.1.2 Instrumentation and controls, including new SCADA systems and upgrades to SCADA system hardware;

4.1.3 SCADA system software or programming that:

a) Measures, monitors or reports on a regulated parameter;
b) Measures, monitor or reports on a parameter that is used to calculate CT; or,
c) Calculates CT for the system or is part of the process algorithm that calculates log removal, where the impacts of addition, modification or replacement have been reviewed by a licensed engineering practitioner;

4.1.4 Filter media, backwashing equipment, filter troughs, and under-drains and associated equipment in the treatment system;

4.1.5 Spill containment works; or,

4.1.6 Coarse screens and fine screens

4.2 The drinking water system may be altered by adding, modifying, replacing or removing the following components in the drinking water system:

4.2.1 Treated water pumps, pressure tanks, and associated equipment;

4.2.2 Raw water pumps and process pumps in the treatment system;

4.2.3 Inline booster pumping stations that are not associated with distribution system storage facilities and are on a watermain with a nominal diameter not exceeding 200 mm;

4.2.4 Re-circulation devices within distribution system storage facilities;

4.2.5 In-line mixing equipment;

4.2.6 Chemical metering pumps and chemical handling pumps;

4.2.7 Chemical storage tanks (excluding fuel storage tanks) and associated equipment; or,

4.2.8 Measuring and monitoring devices that are not required by regulation, by a condition in the Drinking Water Works Permit, or by a condition otherwise imposed by the Ministry.

4.2.9 Chemical injection points;

4.2.10 Valves.

4.3 The drinking water system may be altered by replacing the following:

4.3.1 Raw water piping, treatment process piping or treated water piping within the treatment subsystem;

4.3.2 Measuring and monitoring devices that are required by regulation, by a condition in the Drinking Water Works Permit or by a condition otherwise imposed by the Ministry.

4.3.3 Coagulants and pH adjustment chemicals, where the replacement chemicals perform the same function;

a) Prior to making any alteration to the drinking water system under condition 4.3.3, the owner shall undertake a review of the impacts that the alteration might have on corrosion control or other treatment processes; and

b) The owner shall notify the Director in writing within thirty (30) days of any alteration made under condition 4.3.3 and shall provide the Director with a copy of the review.

c) The notification required in condition 4.3.3 b) shall be submitted using the "Director Notification Form" published by the Ministry.

4.4 Any alteration of the drinking water system made under conditions 4.1, 4.2 or 4.3 shall not result in:

4.4.1 An exceedance of a treatment subsystem rated capacity or a treatment subsystem component maximum flow rate as specified in the licence;

4.4.2 The bypassing or removal of any unit process within a treatment subsystem;

4.4.3 The addition of any new unit process other than coagulation within a treatment subsystem;

4.4.4 A deterioration in the quality of drinking water provided to consumers;

4.4.5 A reduction in the reliability or redundancy of any component of the drinking water system;

4.4.6 A negative impact on the ability to undertake compliance and other monitoring necessary for the operation of the drinking water system; or

4.4.7 An adverse effect on the environment.

4.5 The owner shall verify in writing that any addition, modification, replacement or removal of drinking water system components in accordance with conditions 4.1, 4.2 or 4.3 has met the requirements of the conditions listed in condition 4.4.

4.6 The verifications and documentation required in condition 4.5 shall be:

4.6.1 Recorded on "Form 2 – Record of Minor Modifications or Replacements to the Drinking Water System" published by the Ministry, prior to the modified or replaced components being placed into service; and

4.6.2 Retained for a period of ten (10) years by the owner.

4.7 For greater certainty, the verification requirements set out in conditions 4.5 and 4.6 do not apply to any addition, modification, replacement or removal in respect of the drinking water system which:

4.7.1 Is exempt from subsection 31(1) of the SDWA by subsection 9.(2) of O. Reg. 170/03; or

4.7.2 Constitutes maintenance or repair of the drinking water system, including software changes to a SCADA system that are not listed in condition 4.1.3

4.8 The owner shall update any drawings maintained for the drinking water system to reflect the modification or replacement of the works, where applicable.

5.0 Equipment with Emissions to the Air

5.1 The drinking water system may be altered by adding, modifying or replacing any of the following drinking water system components that may discharge or alter the rate or manner of a discharge of a compound of concern to the air:

5.1.1 Any equipment, apparatus, mechanism or thing that is used for the transfer of outdoor air into a building or structure that is not a cooling tower;

5.1.2 Any equipment, apparatus, mechanism or thing that is used for the transfer of indoor air out of a space used for the production, processing, repair, maintenance or storage of goods or materials, including chemical storage;

5.1.3 Laboratory fume hoods used for drinking water testing, quality control and quality assurance purposes;

5.1.4 Low temperature handling of compounds with a vapor pressure of less than 1 kilopascal;

5.1.5 Maintenance welding stations;

5.1.6 Minor painting operations used for maintenance purposes;

5.1.7 Parts washers for maintenance shops;

5.1.8 Emergency chlorine and ammonia gas scrubbers and absorbers;

5.1.9 Venting for activated carbon units for drinking water taste and odour control;

5.1.10 Venting for a stripping unit for methane removal from a groundwater supply;

5.1.11 Venting for an ozone treatment unit;

5.1.12 Natural gas or propane fired boilers, water heaters, space heaters and make-up air units with a total facility-wide heat input rating of less than 20 million kilojoules per hour, and with an individual fuel energy input of less than or equal to 10.5 gigajoules per hour; or

5.1.13 Emergency generators that fire No. 2 fuel oil (diesel fuel) with a sulphur content of 0.5 per cent or less measured by weight, natural gas, propane, gasoline or biofuel, and that are used for emergency duty only with periodic testing.

5.2 The owner shall not make an addition, modification, or replacement described in condition 5.1 in relation to an activity that is not related to the treatment and/or distribution of drinking water.

5.3 The emergency generators identified in condition 5.1.13 shall not be used for non-emergency purposes including the generation of electricity for sale or for peak shaving purposes.

5.4 The owner shall prepare an emission summary table for nitrogen oxides emissions only, for each addition, modification or replacement of emergency generators identified in condition 5.1.13.

Performance Limits

5.5 The owner shall ensure that a drinking water system component identified in conditions 5.1.1 to 5.1.13 is operated at all times to comply with the following limits:

5.5.1 For equipment other than emergency generators, the maximum concentration of any compound of concern at a point of impingement shall not exceed the corresponding point of impingement limit;

5.5.2 For emergency generators, the maximum concentration of nitrogen oxides at sensitive receptors shall not exceed the applicable point of impingement limit, and at non-sensitive receptors shall not exceed the Ministry half-hourly screening level of 1880 ug/m^3 as amended; and

5.5.3 The noise emissions comply at all times with the limits set out in publication NPC-300, as applicable.

5.6 The owner shall verify in writing that any addition, modification or replacement of works in accordance with condition 5.1 has met the requirements of the conditions listed in condition 5.5.

5.7 The owner shall document how compliance with the performance limits outlined in condition 5.5.3 is being achieved, through noise abatement equipment and/or operational procedures.

5.8 The verifications and documentation required in conditions 5.6 and 5.7 shall be:

5.8.1 Recorded on "Form 3 – Record of Addition, Modification or Replacement of Equipment Discharging a Contaminant of Concern to the Atmosphere", as published by the Ministry, prior to the additional, modified or replacement equipment being placed into service; and

5.8.2 Retained for a period of ten (10) years by the owner.

5.9 For greater certainty, the verification and documentation requirements set out in conditions 5.6 and 5.8 do not apply to any addition, modification or replacement in respect of the drinking water system which:

5.9.1 Is exempt from subsection 31(1) of the SDWA by subsection 9.(2) of O. Reg. 170/03; or

5.9.2 Constitutes maintenance or repair of the drinking water system.

5.10 The owner shall update any drawings maintained for the works to reflect the addition, modification or replacement of the works, where applicable.

6.0 Previously Approved Works

6.1 The owner may add, modify, replace or extend, and operate part of a municipal drinking water system if:

6.1.1 An approval was issued after January 1, 2004 under section 36 of the SDWA in respect of the addition, modification, replacement or extension and operation of that part of the municipal drinking water system;

6.1.2 The approval expired by virtue of subsection 36(4) of the SDWA; and

6.1.3 The addition, modification, replacement or extension commenced within five years of the date that activity was approved by the expired approval.

7.0 System-Specific Conditions

7.1 Not Applicable

8.0 Source Protection

8.1 Not Applicable

Schedule C: Authorization to Alter the Drinking Water System

System Owner	**The Corporation of the Town of Fort Frances**
Permit Number	**224-201**
Drinking Water System Name	**Fort Frances Drinking Water System**
Permit Effective Date	**May 11, 2021**

1.0 General

1.1 Table 2 provides a reference list of all documents to be incorporated into Schedule C that have been issued as of the date that this permit was issued.

1.1.1 Table 2 is not intended to be a comprehensive list of all documents that are part of Schedule C. For clarity, any document issued by the Director to be incorporated into Schedule C after this permit has been issued is considered part of this drinking water works permit.

Table 2: Schedule C Documents

Column 1 Issue #	Column 2 Issued Date	Column 3 Description	Column 4 Status	Column 5 DN#
Not Applicable	Not Applicable	Not Applicable	Not Applicable	Not Applicable

1.2 For each document described in columns 1, 2 and 3 of Table 2, the status of the document is indicated in column 4. Where this status is listed as 'Archived', the approved alterations have been completed and relevant portions of this permit have been updated to reflect the altered works. These 'Archived' Schedule C documents remain as a record of the alterations.

Schedule D: Process Flow Diagrams

System Owner	**The Corporation of the Town of Fort Frances**
Permit Number	**224-201**
Drinking Water System Name	**Fort Frances Drinking Water System**
Permit Effective Date	**May 11, 2021**

1.0 Process Flow Diagrams

Fort Frances Water Treatment Plant

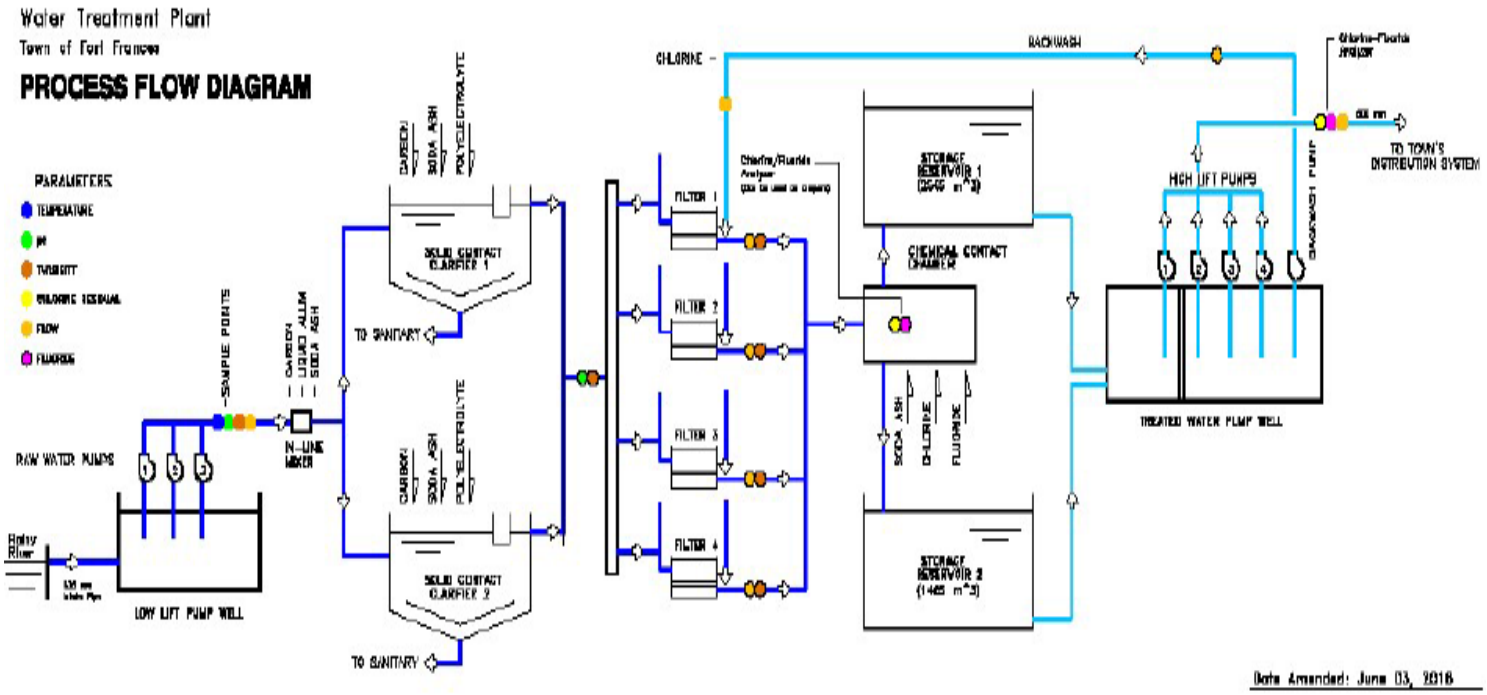

[Source: Quality Management System Operational Plan Town of Fort Frances Water System, Revision No. 13, June 3, 2020]

Note: this process flow diagram is for reference only, and represents a high level overview of the system as of June 3, 2016.

Appendix "C"

PERMIT TO TAKE WATER
Surface Water
Number 3528-AE6PEM

Ontario

Ministry of the Environment and Climate Change
Ministère de l'Environnement et de l'Action en matière de changement climatique

PERMIT TO TAKE WATER
Surface Water
NUMBER 3528-AE6PEM

Pursuant to Section 34.1 of the Ontario Water Resources Act, R.S.O. 1990 this Permit To Take Water is hereby issued to:

The Corporation of the Town of Fort Frances
320 Portage Ave
Fort Frances, Ontario, P9A 3P9
Canada

For the water taking from: Rainy River

Located at: 901 Colonization Rd E
Fort Frances, District of Rainy River

For the purposes of this Permit, and the terms and conditions specified below, the following definitions apply:

DEFINITIONS

(a) "Director" means any person appointed in writing as a Director pursuant to section 5 of the OWRA for the purposes of section 34.1, OWRA.

(b) "Provincial Officer" means any person designated in writing by the Minister as a Provincial Officer pursuant to section 5 of the OWRA.

(c) "Ministry" means Ontario Ministry of the Environment and Climate Change.

(d) "District Office" means the Kenora District Office.

(e) "Permit" means this Permit to Take Water No. 3528-AE6PEM including its Schedules, if any, issued in accordance with Section 34.1 of the OWRA.

(f) "Permit Holder" means The Corporation of the Town of Fort Frances.

(g) "OWRA " means the *Ontario Water Resources Act,* R.S.O. 1990, c. O. 40, as amended.

You are hereby notified that this Permit is issued subject to the terms and conditions outlined below:

TERMS AND CONDITIONS

1. Compliance with Permit

1.1 Except where modified by this Permit, the water taking shall be in accordance with the application for this Permit To Take Water, dated September 12, 2016 and signed by Douglas Herr, and all Schedules included in this Permit.

1.2 The Permit Holder shall ensure that any person authorized by the Permit Holder to take water under this Permit is provided with a copy of this Permit and shall take all reasonable measures to ensure that any such person complies with the conditions of this Permit.

1.3 Any person authorized by the Permit Holder to take water under this Permit shall comply with the conditions of this Permit.

1.4 This Permit is not transferable to another person.

1.5 This Permit provides the Permit Holder with permission to take water in accordance with the conditions of this Permit, up to the date of the expiry of this Permit. This Permit does not constitute a legal right, vested or otherwise, to a water allocation, and the issuance of this Permit does not guarantee that, upon its expiry, it will be renewed.

1.6 The Permit Holder shall keep this Permit available at all times at or near the site of the taking, and shall produce this Permit immediately for inspection by a Provincial Officer upon his or her request.

1.7 The Permit Holder shall report any changes of address to the Director within thirty days of any such change. The Permit Holder shall report any change of ownership of the property for which this Permit is issued within thirty days of any such change. A change in ownership in the property shall cause this Permit to be cancelled.

2. General Conditions and Interpretation

2.1 Inspections
The Permit Holder must forthwith, upon presentation of credentials, permit a Provincial Officer to carry out any and all inspections authorized by the OWRA, the *Environmental Protection Act* , R.S.O. 1990, the *Pesticides Act* , R.S.O. 1990, or the *Safe Drinking Water Act,* S. O. 2002.

2.2 Other Approvals
The issuance of, and compliance with this Permit, does not:

(a) relieve the Permit Holder or any other person from any obligation to comply with any other applicable legal requirements, including the provisions of the *Ontario Water Resources Act* , and the *Environmental Protection Act* , and any regulations made thereunder; or

(b) limit in any way any authority of the Ministry, a Director, or a Provincial Officer, including the authority to require certain steps be taken or to require the Permit Holder to furnish any further information related to this Permit.

2.2.1 Prior to the taking of any water under the authorization of the Permit to Take Water, the Permit Holder shall ensure full compliance with the Safe Drinking Water Act, 2002 and its regulations. At no time does this permit authorize the taking of water when out of compliance with the Safe Drinking Water Act, 2002 and its regulations.

2.3 Information

The receipt of any information by the Ministry, the failure of the Ministry to take any action or require any person to take any action in relation to the information, or the failure of a Provincial Officer to prosecute any person in relation to the information, shall not be construed as:

(a) an approval, waiver or justification by the Ministry of any act or omission of any person that contravenes this Permit or other legal requirement; or

(b) acceptance by the Ministry of the information's completeness or accuracy.

2.4 Rights of Action

The issuance of, and compliance with this Permit shall not be construed as precluding or limiting any legal claims or rights of action that any person, including the Crown in right of Ontario or any agency thereof, has or may have against the Permit Holder, its officers, employees, agents, and contractors.

2.5 Severability

The requirements of this Permit are severable. If any requirements of this Permit, or the application of any requirements of this Permit to any circumstance, is held invalid or unenforceable, the application of such requirements to other circumstances and the remainder of this Permit shall not be affected thereby.

2.6 Conflicts

Where there is a conflict between a provision of any submitted document referred to in this Permit, including its Schedules, and the conditions of this Permit, the conditions in this Permit shall take precedence.

3. Water Takings Authorized by This Permit

3.1 Expiry

This Permit expires on **September 27, 2026**. No water shall be taken under authority of this Permit after the expiry date.

3.2 Amounts of Taking Permitted

The Permit Holder shall only take water from the source, during the periods and at the rates and amounts of taking specified in Table A. Water takings are authorized only for the purposes specified in Table A.

Table A

	Source Name / Description:	Source: Type:	Taking Specific Purpose:	Taking Major Category:	Max. Taken per Minute (litres):	Max. Num. of Hrs Taken per Day:	Max. Taken per Day (litres):	Max. Num. of Days Taken per Year:	Zone/ Easting/ Northing:

1	Rainy River	River	Municipal	Water Supply	12,000	24	17,000,000	365	15 472938 5384735
						Total Taking:	17,000,000		

4. Monitoring

4.1 The Permit Holder shall, on each day water is taken under the authorization of this Permit, record the date, the volume of water taken on that date and the rate at which it was taken. The daily volume of water taken shall be measured by a flow meter or calculated in accordance with the method described in the application for this Permit or as otherwise accepted by the Director. A separate record shall be maintained for each source. The Permit Holder shall keep all records required by this condition current and available at or near the site of the taking and shall produce the records immediately for inspection by a Provincial Officer upon his or her request. The Permit Holder, unless otherwise required by the Director, shall submit, on or before March 31st in every year, the daily water taking data collected and recorded for the previous year to the ministry's Water Taking Reporting System.

5. Impacts of the Water Taking

5.1 Notification

The Permit Holder shall immediately notify the local District Office of any complaint arising from the taking of water authorized under this Permit and shall report any action which has been taken or is proposed with regard to such complaint. The Permit Holder shall immediately notify the local District Office if the taking of water is observed to have any significant impact on the surrounding waters. After hours, calls shall be directed to the Ministry's Spills Action Centre at 1-800-268-6060.

5.2 For Surface-Water Takings

The taking of water (including the taking of water into storage and the subsequent or simultaneous withdrawal from storage) shall be carried out in such a manner that streamflow is not stopped and is not reduced to a rate that will cause interference with downstream uses of water or with the natural functions of the stream.

6. Director May Amend Permit

The Director may amend this Permit by letter requiring the Permit Holder to suspend or reduce the taking to an amount or threshold specified by the Director in the letter. The suspension or reduction in taking shall be effective immediately and may be revoked at any time upon notification by the Director. This condition does not affect your right to appeal the suspension or reduction in taking to the Environmental Review Tribunal under the *Ontario Water Resources Act* , Section 100 (4).

The reasons for the imposition of these terms and conditions are as follows:

1. Condition 1 is included to ensure that the conditions in this Permit are complied with and can be enforced.

2. Condition 2 is included to clarify the legal interpretation of aspects of this Permit.

3. Conditions 3 through 6 are included to protect the quality of the natural environment so as to safeguard the ecosystem and human health and foster efficient use and conservation of waters. These conditions allow for the beneficial use of waters while ensuring the fair sharing, conservation and sustainable use of the waters of Ontario. The conditions also specify the water takings that are authorized by this Permit and the scope of this Permit.

In accordance with Section 100 of the Ontario Water Resources Act, R.S.O. 1990, you may by written Notice served upon me and the Environmental Review Tribunal within 15 days after receipt of this Notice, require a hearing by the Tribunal. Section 101 of the Ontario Water Resources Act, R.S.O. 1990, as amended, provides that the Notice requiring the hearing shall state:

1. The portions of the Permit or each term or condition in the Permit in respect of which the hearing is required, and;
2. The grounds on which you intend to rely at the hearing in relation to each portion appealed.

In addition to these legal requirements, the Notice should also include:

3. The name of the appellant;
4. The address of the appellant;
5. The Permit to Take Water number;
6. The date of the Permit to Take Water;
7. The name of the Director;
8. The municipality within which the works are located;

This notice must be served upon:

The Secretary
Environmental Review Tribunal
655 Bay Street, 15th Floor
Toronto ON
M5G 1E5
Fax: (416) 326-5370
Email: ERTTribunalsecretary@ontario.ca

AND

The Director, Section 34.1, Ministry of the Environment and Climate Change
331-435 James St S
Thunder Bay ON P7E 6S7
Fax: (807) 475-1754

Further information on the Environmental Review Tribunal's requirements for an appeal can be obtained directly from the Tribunal:

by Telephone at	by Fax at	by e-mail at
(416) 212-6349	(416) 326-5370	www.ert.gov.on.ca
Toll Free 1(866) 448-2248	Toll Free 1(844) 213-3474	

This Permit cancels and replaces Permit Number 7280-6UAMD9, issued on 2006/10/05.

Dated at Thunder Bay this 27th day of September, 2016.

Carrie Hutchison

Carrie Hutchison
Director, Section 34.1
Ontario Water Resources Act , R.S.O. 1990

Schedule A

This Schedule "A" forms part of Permit To Take Water 3528-AE6PEM, dated September 27, 2016.

Permit To Take Water 7280-6UAMD9, dated October 5, 2006.

Appendix "D"

2025 Annual Report

ANNUAL REPORT

Drinking-Water System Number:	**220000978**
Drinking-Water System Name:	**Fort Frances Drinking Water System**
Drinking-Water System Owner:	Town of Fort Frances
Drinking-Water System Category:	Large Municipal Residential System
Period being reported:	January 01, 2025 to December 31, 2025

Complete if your Category is Large Municipal Residential or Small Municipal Residential

Does your Drinking-Water System serve more than 10,000 people? Yes [ ] No [x]

Is your annual report available to the public at no charge on a web site on the Internet? Yes [x] No [ ]

Location where Summary Report required under O. Reg. 170/03 Schedule 22 will be available for inspection.

Water Treatment Plant
901 Agamiing Drive

Or

Public Works Department
900 Wright Avenue

Complete for all other Categories.

Number of Designated Facilities served:

Did you provide a copy of your annual report to all Designated Facilities you serve? Yes [ ] No [ ]

Number of Interested Authorities you report to:

Did you provide a copy of your annual report to all Interested Authorities you report to for each Designated Facility? Yes [ ] No [ ]

Note: For the following tables below, additional rows or columns may be added, or an appendix may be attached to the report

List all Drinking-Water Systems (if any), which receive all their drinking water from your system:

Drinking Water System Name	Drinking Water System Number
Couchiching First Nation & Agency 1 Land between Fort Frances and Couchiching First Nation.	Unknown if designated as a Drinking Water System under Provincial Regulation 170/03.
Walleye Trailer Park	Within the Town of Fort Frances' System Number 220000978
Lakeview Trailer Park	Within the Town of Fort Frances' System Number 220000978

Drinking Water System Name	Drinking Water System Number
Friesen 5 - Apartment Units – Oakwood Road	Alberton Township – Private Supplied through Town of Fort Frances' System Number 220000978
Wayne Both – Oakwood Road (Installed 2022; In Service 2023)	Alberton Township – Private Supplied through Town of Fort Frances' System Number 220000978

Did you provide a copy of your annual report to all Drinking-Water System owners that are connected to you and to whom you provide all its drinking water?

Yes [x] No [ ]

Indicate how you notified system users that your annual report is available and is free of charge.

[x] Public access/notice via the web
[x] Public access/notice via Government Office
[ ] Public access/notice via a newspaper
[ ] Public access/notice via Public Request
[ ] Public access/notice via a Public Library
[ ] Public access/notice via other method _____

Describe your Drinking-Water System

INTAKE STRUCTURE:

Located approximately 190 meters southeast of the Water Treatment Plant.

INTAKE LINE:

600mm Polyethylene Pipe.

SCREEN CHAMBER:

Two stainless steel screens.

PUMPWELL:

Raw water enters pump well from screen chamber, gravity feed.

LOW LIFT (RAW WATER) PUMPS:

Three (3) vertical turbine low lift pumps each electrically driven. Two (2) by 30 hp motors with a rated capacity to deliver 100 L/s and one (1) variable speed drive (40 hp) capable of providing flows in the range of 40 to 150 L/s.

RAW WATER FLOW METERING SYSTEM:

This unit counts the liters of water as it passes through the unit.

IN LINE MIXER:

The mixer is equipped with four (4) chemical application injectors and the following chemicals can be added to the treatment process at this point:

1. Liquid Alum (main coagulant)
2. Soda Ash
3. Carbon Slurry
4. Chlorine Solution (pre-chlorination is practiced only under exceptional circumstances)

RAW WATER INFLUENT LINE:

This 450mm line carries the raw water to the two clarifiers.
.

CLARIFIERS:

After pre-treatment, the raw water enters the primary mixing and reaction zone of each unit through the 450mm inlet pipe. Activated carbon, soda ash and polymer can be added to the process in this zone.

Recycled solids are drawn up into the bottom of the zone by the re-circulator impellor to be mixed with the incoming pre-treated water. The re-circulated solids provide additional particle surface area to absorb and entrap precipitates in the raw water. The solids settle to the bottom of the clarifier to form a sludge blanket. The pre-treated water then flows upward and into the effluent box.

FILTER INFLUENT FLUME:

Settled water from the clarifier effluent box is piped through two (2) 450 mm diameter pipes to the filter influent flume for distribution to the filters.

FILTERS:

Four (4) gravity filters are provided. Each filter consists of Ecodyne filtration equipment installed within a square concrete tank. The dual-media gravity filters are to remove any particles in suspension that have carried over from the solids contact clarifiers. The filter media on top of the underdrain system consists of a 500 mm thickness of anthracite over 400mm thickness of silica sand.

The filtered water then enters the chemical contact chamber.

CHEMICAL CONTACT CHAMBER:

This chamber is located between the two (2) reservoir storage cells that are located underneath the filters. In the contact chamber chlorine, soda ash, and hydrofluorosilicic acid are added.

RESERVOIR CELLS:

Two (2) reservoir cells are provided, cell number 1 has capacity of approximately 2,565 m^3 and cell number 2 has capacity of approximately 1,465 m^3.

TREATED WATER PUMP WELL:

The treated water pump well contains the filter backwash pump and high lift pumps. It is located between the two reservoir cells.

HIGH LIFT PUMPS:

These four (4) units draw water from the treated water pump wells. They are of varying capacities and are controlled by the water tower level through the SCADA system.

High Lift Pump # 1: Rated to deliver 63.1 L/s. This pump is equipped with a soft start drive 60 hp electric motor.

High Lift Pump # 2: Rated to deliver 94.7 L/s. This pump is equipped with a 100 hp electric motor.

High Lift Pump # 3: Rated to deliver 126.2 L/S. The pump is equipped with a 125 hp electric motor.

High Lift Pump # 4: Rated to deliver 63.1 L/s. This pump is equipped with a soft start drive 60 hp electric motor.

BACKWASH PUMP:

The backwash pump is used for back washing the filters. It draws water from the pump well. This unit is rated to deliver 300 L/s and is equipped with a 75 hp electric motor.

PLANT EFFLUENT DISCHARGE HEADER:

The plant effluent discharge header receives the flow from the high lift pumps and directs it to the community water distribution system.

There are three (3) online analyzers - one for free chlorine, one for fluoride, and one backup chlorine analyzer - which continually monitor the concentration of free chlorine and fluoride in the treated water, prior to the water entering the water distribution system.

EMERGENCY STANDBY GENERATOR:

The emergency standby generator is a 450kW unit capable of running all the operational needs of the treatment plant. It automatically comes on-line when there is a power outage and shuts down once the power is restored.

RATED CAPACITY OF THE PLANT:

Capacity: 17,000 m^3/day Maximum Flow rate: 12,000 L/min.

List all water treatment chemicals used over this reporting period.

Poly Electrolyte (Coagulant Aid)	900.00 kg (36 bags @ 25 kg / bag)
Aluminum Sulphate (Main Coagulant)	64898.86 kg
Soda Ash (ph Adjustment)	66807.65 kg
Chlorine (Disinfection)	8093.00 kg
Fluoride (Dental Aid)	6774.00 kg

Were any significant expenses incurred too?

[x] Install required equipment.
[x] Repair required equipment.
[x] Replace required equipment.

Please provide a brief description and a breakdown of monetary expenses incurred.

A) Watermain Replacement – Scott Street between Reid Avenue to Mosher Avenue
$389,743.18

B) Watermain Replacement – Third Street West between Central Avenue and York Avenue
$389,297.43

C) Water Treatment Plant – Low Lift Pump Replacement
$ 60,871.91

D) Water Distribution System – Valve (3) and Hydrant (3) Replacement
$37,862.32

E) Water Distribution System – Elevated Tower Rehabilitation
$3,347,073.75

F) Water Treatment Plant – Load Bank Addition to Emergency Generator
$54,150.48

G) Water Treatment Plant – TSS and Dechlorination Project
$ 401,729.05

Provide details on the notices submitted in accordance with subsection 18(1) of the Safe Drinking-Water Act or section 16-4 of Schedule 16 of O.Reg.170/03 and reported to Spills Action Centre

Incident Date	Parameter	Result	Unit of Measure	Corrective Action	Corrective Action Date
September 24, 2025	Total Coliform	Detected	P/A/100mL	Flushed, confirmed free chlorine residual, and re-sampled adverse site. Re-sample met microbiological standards.	September 25, 2025
October 1, 2025	Haloactic Acids (HAAs)	82.175	µg/L	Haloacetic Acids (HAA) running annual average (RAA) exceedance for Q3 of 2025. The RAA was calculated at 82.175 µg/L. A high result of 110 µg/L sampled in June 2025 resulted in an elevated RAA.	Inform NWHU of updated quarterly results as reported by the laboratory.

Microbiological testing was completed under Schedule 10, 11 or 12 of Regulation 170/03, during this reporting period.

	Number of Samples	Range of E. Coli or Fecal Results (min #)- (max #)	Range of Total Coliform Results (min #)- (max #)	Number of HPC Samples	Range of HPC Results (min #)- (max #)
Raw	53	E.C.: <1 – 16	5 – 1500	N/A	N/A
Treated	53	0	0	53	0 – 12
Distribution	414	0	0	217	0 – >300

Operational testing done under Schedule 7, 8 or 9 of Regulation 170/03, during the period covered by this Annual Report.

	Number of Grab Samples	Range of Results (min #)- (max #)
Turbidity	8760	0.07 to 0.20 NTU
Chlorine	8760	1.75 to 2.71 mg/L
Fluoride (If the DWS provides fluoridation)	8760	0.60 to 0.77 mg/L

***NOTE**: For continuous monitors use 8760 as the number of samples.*

***NOTE**: Record the unit of measure if it is **not** milligrams per liter.*

Summary of additional testing and sampling carried out in accordance with the requirement of an approval, order, or other legal instrument.

Date of legal instrument issued	Parameter	Date Sampled	Result	Unit of Measure
June 01/07	Suspended Solids – Filter 1 (1st Cycle) (2nd Cycle) (3rd Cycle)	Jan 16/25	7.8 <3.0 <3.0	mg/L mg/L mg/L
June 01/07	Suspended Solids – Filter 3 (1st Cycle) (2nd Cycle) (3rd Cycle)	Feb 25/25	14.1 <3.0 <3.0	mg/L mg/L mg/L
June 01/07	Suspended Solids – Filter 4 (1st Cycle) (2nd Cycle) (3rd Cycle)	Mar 13/25	4.8 <3.0 <3.0	mg/L mg/L mg/L
June 01/07	Suspended Solids – Filter 1 (1st Cycle) (2nd Cycle) (3rd Cycle)	Apr 16/25	8.1 <3.0 <3.0	mg/L mg/L mg/L
June 01/07	Suspended Solids – Filter 3 (1st Cycle) (2nd Cycle) (3rd Cycle)	May 22/25	28.0 <3.0 <3.0	mg/L mg/L mg/L

June 01/07	Suspended Solids – Filter 4 (1st Cycle) (2nd Cycle) (3rd Cycle)	Jun 19/25	14.0 <3.0 <3.0	mg/L mg/L mg/L
June 01/07	Suspended Solids – Filter 1 (1st Cycle) (2nd Cycle) (3rd Cycle)	Jul 23/25	12.3 <3.0 <3.0	mg/L mg/L mg/L
June 01/07	Suspended Solids – Filter 3 (1st Cycle) (2nd Cycle) (3rd Cycle)	Aug 20/25	10.3 <3.0 <3.0	mg/L mg/L mg/L
June 01/07	Suspended Solids – Filter 4 (1st Cycle) (2nd Cycle) (3rd Cycle)	Sep 17/25	14.7 <3.0 <3.0	mg/L mg/L mg/L
June 01/07	Suspended Solids – Filter 1 (1st Cycle) (2nd Cycle) (3rd Cycle)	Oct 16/25	4.5 <3.0 <3.0	mg/L mg/L mg/L
June 01/07	Suspended Solids – Filter 3 (1st Cycle) (2nd Cycle) (3rd Cycle)	Nov 19/25	7.7 <3.0 <3.0	mg/L mg/L mg/L
June 01/07	Suspended Solids – Filter 4 (1st Cycle) (2nd Cycle) (3rd Cycle)	Dec 17/25	12.4 <3.0 <3.0	mg/L mg/L mg/L

Summary of Inorganic parameters tested during this reporting period or the most recent sample results.

Parameter	Sample Date	Result Value	Unit of Measure	Standard (Max.)	Exceedance
Antimony	March 13, 2025	<0.60	µg/L	6	None
Arsenic	March 13, 2025	<1.0	µg/L	10	None
Barium	March 13, 2025	<10	µg/L	1000	None
Boron	March 13, 2025	<50	µg/L	5000	None
Cadmium	March 13, 2025	<0.10	µg/L	5	None
Chromium	March 13, 2025	<1.0	µg/L	50	None
Selenium	March 13, 2025	<1.0	µg/L	50	None
Uranium	March 13, 2025	<2.0	µg/L	20	None
Mercury	March 13, 2025	<0.10	µg/L	1	None
Nitrite	March 13, 2025	<0.010	mg/L	1	None
Nitrate	March 13, 2025	0.0748	mg/L	10	None
***Lead**	October 4, 2023	<1.0	µg/L	10	None
Sodium (5-year cycle)	March 13, 2025	14.8	mg/L	20	None
Fluoride (5-year cycle)	March 13, 2025	0.553	mg/L	1.5	None

*Only for drinking water systems testing under Schedule 15.2; this includes large municipal non-residential systems, small municipal non-residential systems, non-municipal seasonal residential systems, large non-municipal non-residential systems, and small non-municipal non-residential systems

Summary of lead testing under Schedule 15.1 during this reporting period

(applicable to the following drinking water systems; large municipal residential systems, small municipal residential systems, and non-municipal year-round residential systems)

Date Sampled	Location Type	Number of Samples	Range of Lead Results (min#) – (max #)	Number of Exceedances
April 10, 2023	Distribution	3	<1.0	0
October 4, 2023	Distribution	3	<1.0	0

Note: The Town of Fort Frances is currently exempt from lead testing per O.Reg. 170/03 Schedule 15.1-5(10). Alkalinity and pH are tested twice per year and lead will be tested every third 12-month period.

Summary of Organic parameters sampled during this reporting period or the most recent sample results.

Analyte	Date Sampled	Results	Units	Detection Limit	Exceedance
Volatile Organic Compounds					
Benzene	13-Mar-2025	<0.50	µg/L	0.50	None
Carbon tetrachloride	13-Mar-2025	<0.20	µg/L	0.20	None
Chlorobenzene	13-Mar-2025	<0.50	µg/L	0.50	None
Dichlorobenzene, 1,2-	13-Mar-2025	<0.50	µg/L	0.50	None
Dichlorobenzene, 1,4-	13-Mar-2025	<0.50	µg/L	0.50	None
Dichloroethane, 1,2-	13-Mar-2025	<0.50	µg/L	0.50	None
Dichloroethylene, 1,1-	13-Mar-2025	<0.50	µg/L	0.50	None
Dichloromethane	13-Mar-2025	<1.0	µg/L	1.0	None
Tetrachloroethylene	13-Mar-2025	<0.50	µg/L	0.50	None
Trichloroethylene	13-Mar-2025	<0.50	µg/L	0.50	None
Vinyl chloride	13-Mar-2025	<0.20	µg/L	0.20	None
Polycyclic Aromatic Hydrocarbons					
Benzo(a)pyrene	13-Mar-2025	<0.0050	µg/L	0.0050	None
Chlorinated Phenolics					
Dichlorophenol, 2,4-	13-Mar-2025	<0.20	µg/L	0.20	None
Pentachlorophenol [PCP]	13-Mar-2025	<0.50	µg/L	0.50	None
Tetrachlorophenol, 2,3,4,6-	13-Mar-2025	<0.50	µg/L	0.50	None
Trichlorophenol, 2,4,6-	13-Mar-2025	<0.20	µg/L	0.20	None
Polychlorinated Biphenyls					
Aroclor 1254	13-Mar-2025	<0.020	µg/L	0.020	None
Aroclor 1260	13-Mar-2025	<0.020	µg/L	0.020	None
Polychlorinated biphenyls [PCBs], 1254+1260	13-Mar-2025	<0.030	µg/L	0.030	None

Analyte	Date Sampled	Results	Units	Detection Limit	Exceedance
Herbicides					
Alachlor	13-Mar-2025	<0.050	µg/L	0.050	None
Atrazine	13-Mar-2025	<0.10	µg/L	0.100	None
Atrazine + N-dealkylated metabolites	13-Mar-2025	<0.14	µg/L	0.10	None
Atrazine-desethyl	13-Mar-2025	<0.10	µg/L	0.100	None
Diclofop-methyl	13-Mar-2025	<0.10	µg/L	0.10	None
Diuron	13-Mar-2025	<0.050	µg/L	0.050	None
Metolachlor	13-Mar-2025	<0.025	µg/L	0.0250	None
Metribuzin	13-Mar-2025	<0.10	µg/L	0.100	None
Prometryn	13-Mar-2025	<0.025	µg/L	0.0250	None
Simazine	13-Mar-2025	<0.10	µg/L	0.100	None
Triallate	13-Mar-2025	<0.10	µg/L	0.100	None
Trifluralin	13-Mar-2025	<0.10	µg/L	0.10	None
Acetic acid, 2-methyl-4-chlorophenoxy-[MCPA]	13-Mar-2025	<0.000500	mg/L	0.000050	None
Bromoxynil	13-Mar-2025	<0.500	µg/L	0.050	None
Dicamba	13-Mar-2025	<1.00	µg/L	0.10	None
Dichlorophenoxyacetic acid, 2,4- [2,4-D]	13-Mar-2025	<0.500	µg/L	0.500	None
Diquat (ion)	13-Mar-2025	<1.0	µg/L	1.0	None
Glyphosate	13-Mar-2025	<1.0	µg/L	1.0	
Paraquat (as dichloride)	13-Mar-2025	<1.0	µg/L	1.0	None
Picloram	13-Mar-2025	<1.00	µg/L	1.00	None
Insecticides					
Azinphos-methyl	13-Mar-2025	<0.10	µg/L	0.10	None
Carbaryl	13-Mar-2025	<0.050	µg/L	0.050	None
Carbofuran	13-Mar-2025	<0.025	µg/L	0.025	None
Chlorpyrifos	13-Mar-2025	<0.10	µg/L	0.10	None
Diazinon	13-Mar-2025	<0.025	µg/L	0.025	None
Dimethoate	13-Mar-2025	<0.050	µg/L	0.050	None
Malathion	13-Mar-2025	<0.025	µg/L	0.025	None
Phorate	13-Mar-2025	<0.25	µg/L	0.25	None
Terbufos	13-Mar-2025	<0.50	µg/L	0.50	None

Analyte	Date Sampled	Results	Units	Detection Limit	Exceedance
Haloacetic Acids (2025 Average) (HAA)		**84.60**	ug/L	5.0	Yes
	29-Dec-25	71.8			
	17-Sep-25	77.5			
	19-Jun-25	110.0			
	13-Mar-25	79.1			
Trihalomethanes (2025 Average) (THM)		**81.10**	ug/L	2.0	None
	17-Dec-25	66.5			
	17-Sep-25	80.9			
	19-Jun-25	109.0			
	13-Mar-25	68.0			

List any Inorganic or Organic parameter(s) that exceeded half the standard prescribed in Schedule 2 of Ontario Drinking Water Quality Standards.

Parameter	Results	Units	Date Sampled
Sodium	14.8 (STD – 20)	mg/L	13-Mar-25
HAA	79.1 (STD – 80)	µg/L	13-Mar-25
HAA	110.0 (STD – 80)	µg/L	19-Jun-25
HAA	77.5 (STD – 80)	µg/L	17-Sep-25
HAA	71.8 (STD – 80)	µg/L	29-Dec-25
THM	68.0 (STD – 100)	µg/L	13-Mar-25
THM	109.0 (STD – 100)	µg/L	19-Jun-25
THM	80.9 (STD – 100)	µg/L	17-Sep-25
THM	66.5 (STD – 100)	µg/L	17-Dec-25

Appendix "E"

MECP DRINKING WATER INSPECTION REPORT
2025 Inspection

Ministry of the Environment, Conservation and Parks
Northern Region
Kenora Area Office
808 Robertson Street
Kenora, ON P9N 1X9
Fax: (807) 468-2735
Telephone: (807) 468-2718

Ministère de l'Environnement, de la Protection de la nature et des Parcs
Direction régionale du Nord
Bureau du secteur de Kenora
808 rue Robertson
Kenora, ON P9N 1X9
Télécopieur: (807) 468-2735
Téléphone: (807) 468-2718

December 31, 2025

Sent by E-mail: cmiller@fortfrances.ca

The Corporation of the Town of Fort Frances
320 Portage Avenue
Fort Frances, ON P9A 3P9

Attn: Mr. Craig Miller, Environmental Superintendent

Re: Drinking Water System Inspection Program – 2025/2026 Inspection Report
Fort Frances Water Treatment Plant – Inspection Number: 1-1416823786

Dear Mr. Miller,

The enclosed report documents findings of the inspection that was performed for the Fort Frances Drinking Water System on December 4th, 2025.

There were no issues of Non-Compliance or Non-Conformance identified during the inspection.

The assistance afforded to me by water treatment plant and water distribution system operators was greatly appreciated. Should you have any questions regarding the content of the enclosed report, please do not hesitate to contact me.

Sincerely,

Aaron Causyn
Water Compliance Officer
Ministry of the Environment, Conservation & Parks
Kenora Area Office

AC

ec: The Town of Fort Frances – 320 Portage Ave., Fort Frances, ON P9A 3P9
Attn: **Travis Rob**, Manager of Operations & Facilities – trob@fortfrances.ca
Attn: Molly MacDonald, Compliance Coordinator – mmacdonald@fortfrances.ca
Attn: Greg Wiedenhoeft, Overall Responsible Operator – gwiedenhoeft@fortfrances.ca

Northwestern Health Unit – 21 Wolsley Street, Kenora, ON P9N 3W7
Attn: **Thomas Nabb**, Program Manager – tnabb@nwhu.on.ca

Ministry of the Environment, Conservation & Parks – 808 Robertson St, Kenora, ON
Attn: **Carolyn Lacroix**, Water Compliance Supervisor – carolyn.lacroix@ontario.ca

Ontario

FORT FRANCES DRINKING WATER SYSTEM

INSPECTION REPORT

System Number:	220000978
Entity:	CORPORATION OF THE TOWN OF FORT FRANCES ADMINISTRATION
Inspection Start Date:	November 27, 2025
Site Inspection Date:	December 04, 2025
Inspection End Date:	December 10, 2025
Inspected By:	Aaron Causyn
Badge #:	1560

(signature)

TABLE OF CONTENTS

Page

Introduction ..... 3 – 4

Inspection Details ..... 5 – 23

Appendices

Appendix A – Key Reference and Guidance Material for Municipal Residential Drinking Water Systems

Appendix B – Inspection Rating Record

INTRODUCTION

Purpose

This announced focused inspection was conducted on December 4, 2025, to confirm compliance with Ministry of the Environment, Conservation and Parks' (MECP) legislation and conformance with Ministry drinking water policies and guidelines.

Scope

The Ministry utilizes a comprehensive, multi-barrier approach in the inspection of water systems that focuses on the source, treatment, and distribution components as well as management and the operation of the system. The inspection of the drinking water system (DWS) included both the physical inspection of the component parts of the system listed in Section 4 "Systems Components" of the report and the review of data and documents associated with the operation of the DWS during the review period.

This DWS is subject to the legislative requirements of the Safe Drinking Water Act, 2002 (SDWA) and regulations made therein, including Ontario Regulation 170/03, "Drinking Water Systems" (O. Reg. 170/03). This inspection has been conducted pursuant to Section 81 of the SDWA. This inspection report does not suggest that all applicable legislation and regulations were evaluated. It remains the responsibility of the owner to ensure compliance with all applicable legislative and regulatory requirements.

Facility Contacts and Dates

The Fort Frances DWS is owned and operated by the Town of Fort Frances (Town). Craig Miller, Environmental Superintendent, is the primary contact for the Town, and Greg Wiedenhoeft is the Chief Operator and primary contact for the Fort Frances Water Treatment Plant (WTP). The DWS serves an estimated population of 8,000 and is categorized as a "Large Municipal Residential". Information reviewed for this inspection covered the time period of June 18, 2024 to December 3, 2025.

Systems/Components

All locations associated with primary disinfection were visited as part of this inspection, including the Fort Frances WTP. Typically, the water tower is attended during inspections, however, due to maintenance and repairs occurring at the tower, it was not physically inspected.

Permissions/Approvals

This DWS was subject to specific conditions contained within the following permissions and/or approvals (please note this list is not exhaustive) at the time of the inspection, in addition to the

requirements of the SDWA and its regulations:

- Municipal Drinking Water License (MDWL) 224-101 (Issue No. 4);
- Drinking Water Works Permit (DWWP) 224-201 (Issue No. 3); and,
- Permit To Take Water (PTTW) 3528-AE6PEM.

NON-COMPLIANCE

This should not be construed as a confirmation of full compliance with all potential applicable legal requirements. These inspection findings are limited to the components and/or activities that were assessed, and the legislative framework(s) that were applied. It remains the responsibility of the owner to ensure compliance with all applicable legislative and regulatory requirements.

If you have any questions related to this inspection, please contact the signed Provincial Officer.

RECOMMENDATIONS

This should not be construed as a confirmation of full conformance with all potential applicable BMPs. These inspection findings are limited to the components and/or activities that were assessed, and the legislative framework(s) that were applied. It remains the responsibility of the owner to ensure compliance with all applicable legislative and regulatory requirements.

If you have any questions related to this inspection, please contact the signed Provincial Officer.

INSPECTION DETAILS

This section includes all questions that were assessed during the inspection.

Ministry Program: DRINKING WATER | **Regulated Activity:** DW Municipal Residential

Question ID	DWMR1012001	**Question Type**	Legislative
Legislative Requirement(s): SDWA | 31 | (1);			
Question: Did the owner have a harmful algal bloom monitoring plan in place that met the requirements of the Municipal Drinking Water Licence?			
Compliance Response(s)/Corrective Action(s)/Observation(s): The owner had a harmful algal bloom (HAB) monitoring plan in place which met the requirements. OFFICER OBSERVATIONS: The MDWL requires that a HAB monitoring plan be prepared for the facility. The Town of Fort Frances has developed a document titled: "SOP #7 - Monitoring and Reporting Blue-Green Algae Blooms", which was last revised in July, 2023. The plan includes a daily observation of the shoreline near the drinking water intake and sampling if a blue-green algal bloom is observed or suspected.			

Question ID	DWMR1014001	**Question Type**	Legislative
Legislative Requirement(s): SDWA | 31 | (1);			
Question: Was flow monitoring performed as required by the Municipal Drinking Water Licence or Drinking Water Works Permit?			
Compliance Response(s)/Corrective Action(s)/Observation(s): Flow monitoring was performed as required. OFFICER OBSERVATIONS: Conditions 2.1.1 and 2.1.2, Schedule C of the MDWL requires continuous flow measurements and recording of the flow rate and daily volume of treated water flowing from the WTP to the distribution system and of raw water flowing into the WTP. The WTP is equipped with one raw water flow meter and one treated water flow meter to meet this requirement. Flow meters were operational at all times during the inspection review period.			

Question ID	DWMR1016001	Question Type	Legislative

Legislative Requirement(s):
SDWA | 31 | (1);

Question:
Was the owner in compliance with the conditions associated with maximum flow rate or the rated/operational capacity in the Municipal Drinking Water Licence?

Compliance Response(s)/Corrective Action(s)/Observation(s):
The owner was in compliance with the conditions associated with maximum flow rate and/or the rated/operational capacity conditions.

OFFICER OBSERVATIONS:
Once daily, operators review flow data for the previous 24-hour period and record the total volume of water pumped into and out of the WTP on daily log sheets. The rated capacity for the Fort Frances WTP is 17,000 m^3/day. During the inspection review period, the highest volume of water that left the plant over a 24-hour period was 5,640 m^3, on August 28, 2024; this represents 33% of the rated capacity of the WTP.

Question ID	DWMR1018001	Question Type	Legislative

Legislative Requirement(s):
SDWA | 31 | (1);

Question:
Did the owner ensure that equipment was installed in accordance with Schedule A and Schedule C of the Drinking Water Works Permit?

Compliance Response(s)/Corrective Action(s)/Observation(s):
The owner ensured that equipment was installed as required.

OFFICER OBSERVATIONS:
During the inspection, the undersigned Water Compliance Officer toured the WTP. All components were in place, as per the DWWP. The system is described as having a total of 4 chemical metering pumps for polymer injection; however, two of the pumps (intended for back-up) are not in place. During the next DWWP renewal, the description of the works in Schedule A must be updated to reflect the equipment on site.

Question ID	DWMR1020001	Question Type	Legislative

Legislative Requirement(s):
SDWA | 31 | (1);

Question:
Were Form 1 documents prepared as required?

Compliance Response(s)/Corrective Action(s)/Observation(s):
Form 1 documents were prepared as required.

OFFICER OBSERVATIONS:

During the 2025 construction season, watermain replacement projects occurred on Scott Street and Third Street West. For each project, a Form 1 was completed prior to any work.

Question ID	DWMR1021001	Question Type	Legislative

Legislative Requirement(s):
SDWA | 31 | (1);

Question:
Were Form 2 documents prepared as required?

Compliance Response(s)/Corrective Action(s)/Observation(s):
Form 2 documents were prepared as required.

OFFICER OBSERVATIONS:
During the inspection review period, three Form 2's were completed for the following work:

• Replacement of six valves at the water tower;
• Addition of a load bank to the existing WTP standby generator; and
• Addition of a de-chlorination/waste residuals management system at the WTP.

Question ID	DWMR1025001	Question Type	Legislative

Legislative Requirement(s):
SDWA | 31 | (1);

Question:
Were all parts of the drinking water system that came in contact with drinking water disinfected in accordance with a procedure listed in Schedule B of the Drinking Water Works Permit?

Compliance Response(s)/Corrective Action(s)/Observation(s):
All parts of the DWS were disinfected as required.

OFFICER OBSERVATIONS:
Details related to disinfection are recorded in the appropriate logbook; either the WTP logbook or water distribution system logbook. Additional disinfection records are made in the "Watermain Shutdown Reports". The Ministry recommends including a field in these reports to capture the disinfection method utilized for new watermains. For reference, the appropriate disinfection methods are described in Section 1.1.2 of the Watermain Disinfection Procedure (2020).

Question ID	DWMR1023001	Question Type	Legislative

Legislative Requirement(s):
SDWA | O. Reg. 170/03 | 1-2 | (2);

Question:
Did records indicate that the treatment equipment was operated in a manner that achieved

the design capabilities prescribed by O. Reg. 170/03, Drinking Water Works Permit and/or Municipal Drinking Water Licence at all times that water was being supplied to consumers?

Compliance Response(s)/Corrective Action(s)/Observation(s):

Records indicated that the treatment equipment was operated in a manner that achieved the design capabilities prescribed.

OFFICER OBSERVATIONS:
The Fort Frances WTP provides chemically-assisted filtration through conventional treatment and primary disinfection through chlorination. Secondary disinfection is achieved using chlorination. To ensure that primary disinfection is being achieved at all times at the WTP, records must demonstrate that the requirements outlined in the "Procedure for Disinfection of Drinking Water in Ontario" have been met. For systems using chemically assisted filtration, this includes:

• using a chemical coagulant at all times when the treatment plant is in operation;
• monitoring and adjusting chemical dosages in response to variations in raw water quality;
• maintaining effective backwash procedures, including filter-to-waste or an equivalent procedure during filter ripening to ensure that the effluent turbidity requirements are met at all times;
• continuously monitoring filtrate turbidity from each filter; and,
• meeting the performance criterion for filtered water turbidity of less than or equal to 0.3 NTU in 95% of the measurements taken each month.

Records demonstrated that the above noted requirements were met throughout the inspection review period.

For assessing the capability of a chemical disinfection system to provide effective pathogen inactivation, the CT concept was developed which considers the combination of the concentration of the chemical disinfectant (C) and the effective contact time (T - in minutes) of the disinfectant in the water supply. CT values achieved under various operating conditions (affected by flow, temperature and pH) are then compared with required CT values appended in tables to the "Procedure for Disinfection of Drinking Water in Ontario". The actual CT value must, at all times during plant operation, be equal to or greater than the required overall CT value to ensure the proper level of disinfection.

Under absolute worst-case conditions, consisting of a clearwell pH of 7.5, temperature of 0.5° C, treated water flow of 17,000 m^3/day and a treated water chlorine concentration of 0.85 mg/L, a chlorine residual above 0.85 mg/L must be maintained to achieve adequate disinfection.

Using trend data stored in the plant's SCADA system, information documented in the logbook, electronic data and alarm records, the undersigned Water Compliance Officer verified that primary disinfection requirements were met throughout the inspection review period.

Question ID	DWMR1024001	Question Type	Legislative

Legislative Requirement(s):
SDWA | O. Reg. 170/03 | 1-2 | (2);

Question:
Did records confirm that the water treatment equipment which provides chlorination or chloramination for secondary disinfection was operated as required?

Compliance Response(s)/Corrective Action(s)/Observation(s):
Records confirmed that the water treatment equipment which provides chlorination for secondary disinfection was operated as required.

OFFICER OBSERVATIONS:
Chlorine residuals in the distribution system were consistently maintained above 0.20 mg/L throughout the inspection review period.

Question ID	DWMR1033001	Question Type	Legislative

Legislative Requirement(s):
SDWA | O. Reg. 170/03 | 7-2 | (3); SDWA | O. Reg. 170/03 | 7-2 | (4);

Question:
Was secondary disinfectant residual tested as required for the large municipal residential distribution system?

Compliance Response(s)/Corrective Action(s)/Observation(s):
Secondary disinfectant residual was tested as required.

OFFICER OBSERVATIONS:
Throughout the inspection review period, a distribution water sample was taken on a daily basis and tested for free chlorine residual.

Question ID	DWMR1030001	Question Type	Legislative

Legislative Requirement(s):
SDWA | O. Reg. 170/03 | 7-2 | (1); SDWA | O. Reg. 170/03 | 7-2 | (2);

Question:
Was primary disinfection chlorine monitoring being conducted at a location approved by Municipal Drinking Water Licence and/or Drinking Water Works Permit or at/near a location where the intended CT had just been achieved?

Compliance Response(s)/Corrective Action(s)/Observation(s):
Primary disinfection chlorine monitoring was conducted as required.

OFFICER OBSERVATIONS:
The treated water chlorine residual is monitored by a continuous analyzer at the point where treated water enters the distribution system.

Question ID	DWMR1032001	Question Type	Legislative

Legislative Requirement(s):
SDWA | O. Reg. 170/03 | 7-3 | (2);

Question:
If the drinking water system obtained water from a surface water source and provided filtration, was continuous monitoring of each filter effluent line performed for turbidity?

Compliance Response(s)/Corrective Action(s)/Observation(s):
Continuous monitoring of each filter effluent line was performed for turbidity.

OFFICER OBSERVATIONS:
The Fort Frances WTP has four filters, three of which were in service during the inspection review period. Each filter is equipped with a turbidity analyzer for continuously monitoring filter effluent turbidity.

Question ID	DWMR1035001	Question Type	Legislative

Legislative Requirement(s):
SDWA | O. Reg. 170/03 | 6-5 | (1)1-4;

Question:
Were operators examining continuous monitoring test results and did they examine the results within 72 hours of the test?

Compliance Response(s)/Corrective Action(s)/Observation(s):
Operators were examining continuous monitoring test results as required.

OFFICER OBSERVATIONS:
Each morning, operator review continuous monitoring results on the SCADA computer for the previous 24 hours. Operators also record the time at which they review this data.

Question ID	DWMR1038001	Question Type	Legislative

Legislative Requirement(s):
SDWA | O. Reg. 170/03 | 6-5 | (1)1-4;

Question:
Was continuous monitoring equipment that was being utilized to fulfill O. Reg. 170/03 requirements performing tests for the parameters with at least the minimum frequency and recording data with the prescribed format?

Compliance Response(s)/Corrective Action(s)/Observation(s):
Continuous monitoring equipment that was being utilized to fulfill O. Reg. 170/03 requirements was performing tests for the parameters with at least the minimum frequency and recording data with the prescribed format.

OFFICER OBSERVATIONS:
Final effluent chlorine residuals and filter effluent turbidity from each filter are read and recorded in the SCADA system every 60 seconds. Final effluent chlorine residuals are also

documented on a chart recorder. Daily, the SCADA system prints out a summary of all the filter effluent turbidity data on a daily basis. Based on the data collected, every 15 minutes, the mean, maximum and average values of the previous 15 minutes of data are recorded.

During the inspection, it was confirmed that the minimum testing and recording frequency was met for the inspection review period.

Question ID	DWMR1037001	**Question Type**	Legislative

Legislative Requirement(s):
SDWA | O. Reg. 170/03 | 6-5 | (1)5-10; SDWA | O. Reg. 170/03 | 6-5 | (1.1);

Question:
Were all continuous monitoring equipment utilized for sampling and testing required by O. Reg. 170/03, or Municipal Drinking Water Licence or Drinking Water Works Permit or order, equipped with alarms or shut-off mechanisms that satisfied the standards described in Schedule 6?

Compliance Response(s)/Corrective Action(s)/Observation(s):
All required continuous monitoring equipment utilized for sampling and testing were equipped with alarms or shut-off mechanisms that satisfied the standards

OFFICER OBSERVATIONS:
Clearwell free chlorine and filter turbidity alarms have been programmed into the SCADA system at the Fort Frances WTP to meet regulatory alarm standards. If the chlorine residual in the clearwell drops to 1.8 mg/L, an alarm will sound immediately and an operator will be notified. Typically, the low chlorine alarm set point is 1.6 mg/L; however, operators have chosen a more conservative value (i.e. 1.8 mg/L) for the period that the water tower is down for maintenance and repairs.

If turbidity levels in the filters go above 0.30 NTU for a period of 10 minutes, the filter will shut down and an operator will be notified. If turbidity levels go above 0.80 NTU, the filter will shut down immediately and an operator will be notified. If turbidity levels drop below 0.01 NTU (indicative of an equipment failure), the filter will shut down immediately and an operator will be notified.

Question ID	DWMR1040001	**Question Type**	Legislative

Legislative Requirement(s):
SDWA | O. Reg. 170/03 | 6-5 | (1)1-4; SDWA | O. Reg. 170/03 | 6-5 | (1)5-10;

Question:
Were all continuous analysers calibrated, maintained, and operated, in accordance with the manufacturer's instructions or the regulation?

Compliance Response(s)/Corrective Action(s)/Observation(s):
All continuous analysers were calibrated, maintained, and operated as required.

OFFICER OBSERVATIONS:

Two chlorine and three turbidity continuous analyzers were calibrated by a third party on two occasions during the inspection review period: August, 2024 and August, 2025. On both occasions, all analyzers passed calibration. The turbidity analyzer for filter no. 2 was not calibrated because it is currently offline. The Town intends to bring filter no. 2 back online in 2026.

Question ID	DWMR1108001	Question Type	Legislative

Legislative Requirement(s):
SDWA | O. Reg. 170/03 | 6-5 | (1)5-10; SDWA | O. Reg. 170/03 | 6-5 | (1.1);

Question:
Where continuous monitoring equipment used for the monitoring of free chlorine residual, total chlorine residual, combined chlorine residual or turbidity, required by O. Reg. 170/03, Municipal Drinking Water Licence, Drinking Water Works Permit, or order triggered an alarm or an automatic shut-off, did a qualified person respond as required and take appropriate actions?

Compliance Response(s)/Corrective Action(s)/Observation(s):
A qualified person responded as required and took appropriate actions.

OFFICER OBSERVATIONS:
A review of continuous analyzer data demonstrated that when there was an alarm for chlorine or turbidity, a certified operator responded as required and documented their actions and response times in the logbook.

Question ID	DWMR1099001	Question Type	Information

Legislative Requirement(s):
Not Applicable

Question:
Do records show that water provided by the drinking water system met the Ontario Drinking Water Quality Standards?

Compliance Response(s)/Corrective Action(s)/Observation(s):
Records showed that not all water sample results met the Ontario Drinking Water Quality Standards.

OFFICER OBSERVATIONS:
On September 24, 2025, total coliforms were detected in the distribution system, and on October 15, 2025, HAA concentrations in the distribution system exceeded the maximum acceptable concentration.

Question ID	DWMR1083001	Question Type	Legislative

Legislative Requirement(s):
SDWA | O. Reg. 170/03 | 10-3;

Question:
Were treated microbiological sampling requirements prescribed by Schedule 10-3 of O. Reg. 170/03 for large municipal residential systems met?

Compliance Response(s)/Corrective Action(s)/Observation(s):
Treated microbiological sampling requirements were met.

OFFICER OBSERVATIONS:
Throughout the inspection review period, treated water samples were collected once per week from the point of entry to the distribution system and were tested for E. coli, total coliform bacteria and heterotrophic plate counts (HPCs), as required.

Question ID	DWMR1081001	**Question Type**	Legislative

Legislative Requirement(s):
SDWA | O. Reg. 170/03 | 10-2 | (1); SDWA | O. Reg. 170/03 | 10-2 | (2); SDWA | O. Reg. 170/03 | 10-2 | (3);

Question:
Were distribution microbiological sampling requirements prescribed by Schedule 10-2 of O. Reg. 170/03 for large municipal residential systems met?

Compliance Response(s)/Corrective Action(s)/Observation(s):
Distribution microbiological sampling requirements were met.

OFFICER OBSERVATIONS:
Owners and operating authorities of DWS's that serve 100,000 or fewer people must ensure that at least eight distribution samples (plus one additional distribution sample for every 1,000 people served by the system) are taken each month. At least one of the samples must be taken each week. The samples must be tested for E. coli and total coliform bacteria, with at least 25% of the required samples to be tested for HPCs. The Fort Frances DWS serves a population of approximately 8,000 people; therefore, at least 16 distribution samples must be taken every month. These requirements were met throughout the inspection review period.

Question ID	DWMR1096001	**Question Type**	Legislative

Legislative Requirement(s):
SDWA | O. Reg. 170/03 | 6-3 | (1);

Question:
Did records confirm that chlorine residual tests were conducted at the same time and location as microbiological samples?

Compliance Response(s)/Corrective Action(s)/Observation(s):
Records confirmed that chlorine residual tests were conducted as required.

Question ID	DWMR1084001	Question Type	Legislative

Legislative Requirement(s):
SDWA | O. Reg. 170/03 | 13-2;

Question:
Were inorganic parameter sampling requirements prescribed by Schedule 13-2 of O. Reg. 170/03 met?

Compliance Response(s)/Corrective Action(s)/Observation(s):
Inorganic parameter sampling requirements were met.

OFFICER OBSERVATIONS:
Treated water samples must be tested at least once every 12 months (+/- 30 days) for inorganic parameters listed in O. Reg. 170/03, Schedule 23. These parameters were last sampled on March 13, 2025 and had been previously sampled on March 20, 2024. All test results were below maximum acceptable concentrations identified in O. Reg 169/03.

Question ID	DWMR1085001	Question Type	Legislative

Legislative Requirement(s):
SDWA | O. Reg. 170/03 | 13-4 | (1); SDWA | O. Reg. 170/03 | 13-4 | (2); SDWA | O. Reg. 170/03 | 13-4 | (3);

Question:
Were organic parameter sampling requirements prescribed by Schedule 13-4 of O. Reg. 170/03 met?

Compliance Response(s)/Corrective Action(s)/Observation(s):
Organic parameter sampling requirements were met.

OFFICER OBSERVATIONS:
Treated water samples must be tested at least once every 12 months (+/- 30 days) for organic parameters listed in O. Reg. 170/03, Schedule 24. These parameters were last sampled on March 13, 2025 and had been previously sampled on March 20, 2024. All test results were below maximum acceptable concentrations identified in O. Reg 169/03.

Question ID	DWMR1086001	Question Type	Legislative

Legislative Requirement(s):
SDWA | O. Reg. 170/03 | 13-6.1 | (1); SDWA | O. Reg. 170/03 | 13-6.1 | (2); SDWA | O. Reg. 170/03 | 13-6.1 | (3); SDWA | O. Reg. 170/03 | 13-6.1 | (4); SDWA | O. Reg. 170/03 | 13-6.1 | (5); SDWA | O. Reg. 170/03 | 13-6.1 | (6);

Question:
Were haloacetic acid sampling requirements prescribed by Schedule 13-6 of O. Reg. 170/03 met?

Compliance Response(s)/Corrective Action(s)/Observation(s):
Haloacetic acid (HAA) sampling requirements were met.

OFFICER OBSERVATIONS:
HAA sampling must be conducted every three months. An HAA sample was collected from the distribution system on June 19, 2024 (102 µg/L), September 17, 2024 (59.6 µg/L), December 18, 2024 (62.1 µg/L), March 13, 2025 (79.1 µg/L), June 19, 2025 (110.0 µg/L) and September 17, 2025 (77.5 µg/L). The HAA running annual average at the time of the inspection was 82.17 µg/L, and the maximum allowable concentration is 80.0 µg/L. This exceedance is discussed further on page 19 of this report.

Question ID	DWMR1087001	**Question Type**	Legislative

Legislative Requirement(s):
SDWA | O. Reg. 170/03 | 13-6 | (1); SDWA | O. Reg. 170/03 | 13-6 | (2); SDWA | O. Reg. 170/03 | 13-6 | (3); SDWA | O. Reg. 170/03 | 13-6 | (4); SDWA | O. Reg. 170/03 | 13-6 | (5); SDWA | O. Reg. 170/03 | 13-6 | (6);

Question:
Were trihalomethane sampling requirements prescribed by Schedule 13-6 of O. Reg. 170/03 met?

Compliance Response(s)/Corrective Action(s)/Observation(s):
Trihalomethane (THM) sampling requirements were met.

OFFICER OBSERVATIONS:
THM sampling must be conducted every three months. A THM sample was collected from the distribution system on June 19, 2024 (116.0 µg/L), September 17, 2024 (118.0 µg/L), December 18, 2024 (65.1 µg/L), March 13, 2025 (76.0 µg/L), June 19, 2025 (109.0 µg/L) and September 17, 2025 (80.9 µg/L). The THM running annual average at the time of the inspection was 82.75 µg/L, and the maximum allowable concentration is 100.0 µg/L.

Question ID	DWMR1088001	**Question Type**	Legislative

Legislative Requirement(s):
SDWA | O. Reg. 170/03 | 13-7;

Question:
Were nitrate/nitrite sampling requirements prescribed by Schedule 13-7 of O. Reg. 170/03 met?

Compliance Response(s)/Corrective Action(s)/Observation(s):
Nitrate/nitrite sampling requirements were met.

OFFICER OBSERVATIONS:
Nitrate/nitrite sampling must be conducted every three months. A nitrate/nitrite sample was collected from the treated water on June 19, 2024, September 17, 2024, December 18, 2024, March 13, 2025, June 19, 2025, and September 17, 2025. All results were below the maximum acceptable concentration.

Question ID	DWMR1089001	Question Type	Legislative

Legislative Requirement(s):
SDWA | O. Reg. 170/03 | 13-8;

Question:
Were sodium sampling requirements prescribed by Schedule 13-8 of O. Reg. 170/03 met?

Compliance Response(s)/Corrective Action(s)/Observation(s):
Sodium sampling requirements were met.

OFFICER OBSERVATIONS:
Sodium samples must be collected from the WTP at the point of entry to the distribution system at least once every 60 months. A sodium sample was collected on March 13, 2025, with a result of 14.8 mg/L. The maximum acceptable concentration for sodium is 20.0 mg/L.

Question ID	DWMR1091001	Question Type	Legislative

Legislative Requirement(s):
SDWA | O. Reg. 170/03 | 7-4;

Question:
Where fluoridation is practiced, were fluoride sampling requirements prescribed by Schedule 7-4 of O. Reg. 170/03 met?

Compliance Response(s)/Corrective Action(s)/Observation(s):
Fluoride sampling requirements were met.

OFFICER OBSERVATIONS:
Operators test fluoride levels on a daily basis in the lab with a handheld analyzer.

Question ID	DWMR1104001	Question Type	Legislative

Legislative Requirement(s):
SDWA | O. Reg. 170/03 | 16-6 | (1); SDWA | O. Reg. 170/03 | 16-6 | (2); SDWA | O. Reg. 170/03 | 16-6 | (3); SDWA | O. Reg. 170/03 | 16-6 | (3.1); SDWA | O. Reg. 170/03 | 16-6 | (3.2); SDWA | O. Reg. 170/03 | 16-6 | (4); SDWA | O. Reg. 170/03 | 16-6 | (5); SDWA | O. Reg. 170/03 | 16-6 | (6);

Question:
Were immediate verbal notification requirements for adverse water quality incidents met?

Compliance Response(s)/Corrective Action(s)/Observation(s):
Immediate verbal notification requirements for adverse water quality incidents were met.

OFFICER OBSERVATIONS:
The only verbal report required during the inspection review period was for a total coliforms exceedance on September 24, 2025. An operator verbally reported the exceedance to the Northwestern Health Unit (NWHU) and Spill's Action Centre within half an hour of receiving notification of the exceedance from the laboratory.

Question ID	DWMR1101001	Question Type	Legislative

Legislative Requirement(s):
SDWA | O. Reg. 170/03 | 17-1; SDWA | O. Reg. 170/03 | 17-10 | (1); SDWA | O. Reg. 170/03 | 17-11; SDWA | O. Reg. 170/03 | 17-12; SDWA | O. Reg. 170/03 | 17-13; SDWA | O. Reg. 170/03 | 17-14; SDWA | O. Reg. 170/03 | 17-2; SDWA | O. Reg. 170/03 | 17-3; SDWA | O. Reg. 170/03 | 17-4; SDWA | O. Reg. 170/03 | 17-5; SDWA | O. Reg. 170/03 | 17-6; SDWA | O. Reg. 170/03 | 17-9;

Question:
For large municipal residential systems, were corrective actions, including any steps directed by the Medical Officer of Health, taken to address adverse conditions?

Compliance Response(s)/Corrective Action(s)/Observation(s):
Corrective actions were taken to address adverse conditions.

OFFICER OBSERVATIONS:
In the third quarter of 2025, the running annual average for HAAs exceeded the maximum acceptable concentration of 80.0 µg/L. Other than ongoing quarterly sampling, the NWHU has not issued any further corrective actions. If HAAs consistently exceed 80.0 µg/L in 2026, the NWHU will consider additional requirements and a Health Information Advisory may be issued.

Question ID	DWMR1045001	Question Type	Legislative

Legislative Requirement(s):
SDWA | 31 | (1);

Question:
Did the owner update the document describing the distribution components within 12 months of completion of alterations to the system in accordance with the Drinking Water Works Permit?

Compliance Response(s)/Corrective Action(s)/Observation(s):
The owner had up-to-date documents describing the distribution components.

Question ID	DWMR1054001	Question Type	Information

Legislative Requirement(s):
Not Applicable

Question:
Was an agreement in place that satisfied the requirements prescribed by subsection 5(4) of O. Reg. 170/03?

Compliance Response(s)/Corrective Action(s)/Observation(s):
The agreement in place satisfied the requirements.

Question ID	DWMR1055001	Question Type	Legislative

Legislative Requirement(s):
SDWA | O. Reg. 170/03 | 5 | (5);

Question:
If there were standalone distribution systems connected to this donor system, was the owner of the donor system in compliance with all agreements made under subsection 5(4) of O. Reg. 170/03?

Compliance Response(s)/Corrective Action(s)/Observation(s):
The owner of the donor system was in compliance with all agreements.

OFFICER OBSERVATIONS:
The Town provides copies of the annual report to Couchiching First Nation, Lakeview Trailer Park, Walleye Trailer Park, and an apartment complex located in Alberton Township. Couchiching First Nation is the only true standalone system, located on federal land; the 2024 Annual Report was provided to the community on April 8, 2025.

Question ID	DWMR1060001	Question Type	Legislative

Legislative Requirement(s):
SDWA | 31 | (1);

Question:
Did the operations and maintenance manual(s) meet the requirements of the Municipal Drinking Water Licence?

Compliance Response(s)/Corrective Action(s)/Observation(s):
The operations and maintenance manual(s) met the requirements of the MDWL.

Question ID	DWMR1062001	Question Type	Legislative

Legislative Requirement(s):
SDWA | O. Reg. 170/03 | 7-5;

Question:
Did records or other record keeping mechanisms confirm that operational testing not performed by continuous monitoring equipment was done by a certified operator, water quality analyst, or person who met the requirements of Schedule 7-5 of O. Reg. 170/03?

Compliance Response(s)/Corrective Action(s)/Observation(s):
Records or other record keeping mechanisms confirmed that operational testing not performed by continuous monitoring equipment was done by a certified operator, water quality analyst, or person who met the requirements of Schedule 7-5 of O. Reg. 170/03.

OFFICER OBSERVATIONS:
Only certified operators worked in the WTP and distribution system during the inspection review period.

Question ID	DWMR1071001	Question Type	BMP

Legislative Requirement(s):
Not Applicable

Question:
Did the owner provide security measures to protect components of the drinking water system?

Compliance Response(s)/Corrective Action(s)/Observation(s):
The owner provided security measures to protect components of the DWS.

OFFICER OBSERVATIONS:
Water storage is provided by the clearwell at the DWS and by a water tower in the distribution system. All facilities are locked at all times when personnel are absent. The water tower is fenced and equipped with a locked gate. 'No Trespassing' signs have been posted at both locations. Operators stated that there were no issues with security or vandalism during the inspection review period.

Question ID	DWMR1073001	Question Type	Legislative

Legislative Requirement(s):
SDWA | O. Reg. 128/04 | 23 | (1);

Question:
Was an overall responsible operator designated for all subsystems which comprise the drinking water system?

Compliance Response(s)/Corrective Action(s)/Observation(s):
An overall responsible operator (ORO) was designated for all subsystem.

OFFICER OBSERVATIONS:
An appropriately certified operator was designated (and documented in the logbook) as ORO, at all times, for the WTP and distribution system.

Question ID	DWMR1074001	Question Type	Legislative

Legislative Requirement(s):
SDWA | O. Reg. 128/04 | 25 | (1);

Question:
Were operators-in-charge designated for all subsystems which comprise the drinking water system?

Compliance Response(s)/Corrective Action(s)/Observation(s):
Operators-in-charge (OIC) were designated for all subsystems.

Question ID	DWMR1075001	Question Type	Legislative

Legislative Requirement(s):
SDWA | O. Reg. 128/04 | 22;

Question:
Were all operators certified as required?

Compliance Response(s)/Corrective Action(s)/Observation(s):
All operators were certified as required.

Question ID	DWMR1076001	Question Type	Legislative

Legislative Requirement(s):
SDWA | O. Reg. 170/03 | 1-2 | (2);

Question:
Were adjustments to the treatment equipment only made by certified operators?

Compliance Response(s)/Corrective Action(s)/Observation(s):
Adjustments to the treatment equipment were only made by certified operators.

Question ID	DWMR1117001	Question Type	Information

Legislative Requirement(s):
Not Applicable

Question:
Were there any other items related to the drinking water system that should be recognized in the report?

Compliance Response(s)/Corrective Action(s)/Observation(s):
The following items were noted as being relevant to the DWS:

OFFICER OBSERVATIONS:
The Ministry makes the following recommendations to the Town of Fort Frances:

1. That the internal form entitled "Watermain Shutdown Report" be modified to include a field for the disinfection method that is used for new watermains, and a field for the chlorine concentrations related to the disinfection method.

2. That preventative maintenance be applied to the continuous chlorine analyzers, related to the addition of probe electrolyte before the analyzer runs out of electrolyte and reads erroneously.

Ontario

Key Reference and Guidance Material for Municipal Residential Drinking Water Systems

Key Reference and Guidance Material for Municipal Residential Drinking Water Systems

Many useful materials are available to help you operate your drinking water system. Below is a list of key materials owners and operators of municipal residential drinking water systems frequently use.

To access these materials online click on their titles in the table below or use your web browser to search for their titles. Contact the Ministry if you need assistance or have questions at 1-866-793-2588 or waterforms@ontario.ca.

For more information on Ontario's drinking water visit www.ontario.ca/drinkingwater

PUBLICATION TITLE	PUBLICATION NUMBER
FORMS: Drinking Water System Profile Information Laboratory Services Notification Adverse Test Result Notification	 012-2149E 012-2148E 012-4444E
Taking Care of Your Drinking Water: A Guide for Members of Municipal Councils	Website
Procedure for Disinfection of Drinking Water in Ontario	Website
Strategies for Minimizing the Disinfection Products Trihalomethanes and Haloacetic Acids	Website
Filtration Processes Technical Bulletin	Website
Ultraviolet Disinfection Technical Bulletin	Website
Guide for Applying for Drinking Water Works Permit Amendments, & License Amendments	Website
Certification Guide for Operators and Water Quality Analysts	Website
Guide to Drinking Water Operator Training Requirements	9802E
Community Sampling and Testing for Lead: Standard and Reduced Sampling and Eligibility for Exemption	Website
Drinking Water System Contact List	7128E01
Ontario's Drinking Water Quality Management Standard - Pocket Guide	Website
Watermain Disinfection Procedure	Website
List of Licensed Laboratories	Website

PIBS 8990b01

Ontario

Ontario

Inspection Rating Record

DWS Name: FORT FRANCES DRINKING WATER SYSTEM
DWS Number: 220000978
DWS Owner: THE CORPORATION OF THE TOWN OF FORT FRANCES
Municipal Location: FORT FRANCES

Regulation: O.REG. 170/03
DWS Category: DW Municipal Residential
Type of Inspection: Focused
Compliance Assessment Start Date: Apr-2-2025
Ministry Office: Kenora Area Office

Maximum Risk Rating: 500

Inspection Module	Non Compliance Risk (X out of Y)
Capacity Assessment	0/30
Certification and Training	0/42
Distribution System	0/4
Logbooks	0/14
Operations Manuals	0/14
Reporting & Corrective Actions	0/66
Source	0/0
Treatment Processes	0/218
Water Quality Monitoring	0/112
Overall - Calculated	**0/500**

Inspection Risk Rating:	**0.00%**

Final Inspection Rating:	**100.00%**

DWS Name:	FORT FRANCES DRINKING WATER SYSTEM
DWS Number:	220000978
DWS Owner Name:	THE CORPORATION OF THE TOWN OF FORT FRANCES
Municipal Location:	FORT FRANCES
Regulation:	O.REG. 170/03
DWS Category:	DW Municipal Residential
Type of Inspection:	Focused
Compliance Assessment Start Date:	Apr-2-2025
Ministry Office:	Kenora Area Office

All legislative requirements were met. No detailed rating scores.

Maximum Question Rating: 500

Inspection Risk Rating:	**0.00%**

FINAL INSPECTION RATING:	**100.00%**